Datasheet

60-2230C-P/60-2230C-PU

Version 1.9

Revision History

Version	Date	Notes	Contributor(s)	Approver
1.0	06 Apr 2018	Initial version	Andrew Chen	Jay White
1.1	15 Jun 2018	Updated block diagram. Changed pin type and description to NC on pin 54	Kai Wei	Jay White
1.2	07 Nov 2018	Removed 802.11s reference		Jay White
1.3	14 Nov 2018	Fixed channels for KC		Andrew Chen
1.4	07 Feb 2019	Revised FCC and IC ID numbers	Tom Smith	Jay White
1.5	13 Feb 2019	Updated logos and URLs; corrected Korea ID #	Connie Linn	Sue White
1.6	17 Apr 2019	Removed DFS Radar Detection references		Jay White
1.7	23 July 2019	Corrected Table 20: Pin Definitions. Pin76,77 are not exist. Updated Peak Current consumption Corrected I/O Signalling Voltage	Kai Wei	Jay White
1.8	26 Sept 2019	Removed AoA/DoA references		Jay White
1.9	11 Oct 2019	Removed Android version numbers	Joe Conley	Jay White

© Copyright 2019 Laird. All Rights Reserved
Americas: +1-800-492-2320
Europe: +44-1628-858-940
Hong Kong: +852 2923 0610

Contents

1 Scope 4
2 Introduction 4
2.1 General Description 4
3 Features Summary 4
4 Specifications 6
5 WLAN Functional Description 11
6 Bluetooth Functional Description 14
7 Block Diagram 15
8 Electrical Characteristics 16
8.1 Absolute Maximum Ratings 16
8.2 Recommended Operating Conditions 16
8.3 DC Electrical Characteristics 16
8.4 WLAN Radio Receiver Characteristics 17
8.5 WLAN Transmitter Characteristics 18
9 Bluetooth Radio Characteristics 20
10 PCIE Specifications 22
11 USB Specifications 25
12 PCM interface specifications 28
2. Pin Definitions 29
13 Mechanical Specifications 32
14 Mounting 33
15 RF Layout Design Guidelines / Precautions 33
16 Regulatory 34
16.1 Regulatory IDs Summary 34
16.2 Certified Antennas 34
17 FCC and IC Regulatory 35
17.1 FCC 35
17.2 Industry Canada 36
18 European Union Regulatory 39
19 Ordering Information 40

© Copyright 2019 Laird. All Rights Reserved
Americas: +1-800-492-2320
Europe: +44-1628-858-940
Hong Kong: +852 2923 0610

1 Scope

This document describes key hardware aspects of the Laird 60-2230C-P/ 60-2230C-PU M.2 module providing either PCIe bus interface for WLAN connection and UART(60-2230C-P)/USB (60-2230C-PU) for Bluetooth® (including Low Energy or LE) connection. This document is intended to assist device manufacSQGturers and related parties with the integration of this module into their host devices. Data in this document is drawn from the Marvell 88W8997 datasheet issued in April 25, 2016.

Note that the information in this document is subject to change. Please contact Laird to obtain the most recent version of this document.

2 Introduction

2.1 General Description

The 60-2230C-P/60-2230C-PU module is a dual band 2x2 802.11ac WLAN plus Bluetooth 4.2 dual mode adapter; it complies with M.2 2230 E-Key standard. The module provides both simultaneous and independent operation of the following:

- IEEE 802.11ac (Wave 2), 2x2 receive Multi-User MIMO spatial stream multiplexing with data rates up to MCS9 (866.7 Mbps)
- Bluetooth (Class 1 and Class 2)
- Bluetooth 4.2 (with Low Energy or LE)
- Bluetooth 5 Ready
- Bluetooth *Smart Ready* operation
- Three-way coexistence for WLAN and Bluetooth

Note: The *Bluetooth*® word mark and logos are registered trademarks owned by Bluetooth SIG, Inc. and any use of such marks by Laird is under license. Other trademarks and trade names are those of their respective owners.

Internal coexistence arbitration and a Mobile Wireless System (MWS) serial transport interface provide the functionality for connecting an external Long Term Evolution (LTE).

The module integrates all WLAN and Bluetooth functionality into a single package which supports low-cost and simple implementation along with flexibility for platform-specific customization. In addition, it has low power consumption radio architecture and proprietary power save technologies to extended battery life.

WLAN interface:

- PCIe – Supports PCIe V2.0 Gen 1/Gen 2 rate (2.5/5 Gbps) interface

Bluetooth Interfaces:

- USB 2.0 – 60-2230C-PU only
- High-Speed UART – 60-2230C-P only

The 60-2230C-P/60-2230C-PU modules also provide a PCM interface for master or slave mode – with the option of an 8-bit or 16-bit width size. Pins CON[0], CON[1], and CON[2] are used to configure the operation interface.

- 60-2230C-P – The interfaces are PCIe/UART (WLAN/Bluetooth) with configuration setting to *011*.
- 60-2230C-PU – The interfaces are PCIe/USB (WLAN/Bluetooth) with configuration setting to *010*.

3 Features Summary

The Laird 60-2230C-P/60-2230C-PU device features are described in Table 1.

© Copyright 2019 Laird. All Rights Reserved
Americas: +1-800-492-2320
Europe: +44-1628-858-940
Hong Kong: +852 2923 0610

Table 1: 60-2230C-P/60-2230C-PU features

Feature	Description
Radio Front End	▪ Integrates the complete transmit/receive RF paths including band pass filter, diplexer, switches, reference crystal oscillator, and power manage unit (PMU) ▪ Supports 20/40/80 MHz channel bandwidth ▪ WLAN/Bluetooth share one antenna
Coexistence	Coexistence arbitration for WLAN, Bluetooth, and LTE operation
Power Management	Dynamic Voltage Scaling (DVS) and Adaptive Voltage Scaling (AVS) feature supports the latest Marvell SoC and processor power control scheme.
Pre-Calibration	RF system-tested and calibrated in production.
Sleep Clock	An external sleep clock of 32.768 KHz is required during power save mode.
Host Interface	▪ PCIe V2.0 Gen 1/Gen 2 for WLAN ▪ USB 2.0, HS-UART for Bluetooth HCI (compatible with any upper layer Bluetooth stack) ▪ PCM digital audio interface for Bluetooth audio application. **Strap Value CONFIG_HOST[2-0]** / **WLAN** / **Bluetooth/BLE** / **ROM Notes** 010 / PCIe / USB 2.0 / - 011 / PCIe / UART / -
Reference Frequency	▪ Incorporates a 40 MHz reference frequency source in package ▪ An external sleep clock is recommended for minimal current consumption. If no sleep clock input is provided, an internal sleep clock (derived from the reference clock) is used. An approximate 50 uA current increase on the 3.3V rail.
Advanced WLAN	▪ A-MPDU RX (de-aggregation) and TX (aggregation) supports 802.11ac single-MPDU A-MPDU ▪ Multi-BSS/Station ▪ Transmit rate adaption, transmit power control ▪ Modulation and coding scheme (MCS): – 802.11ac—MCS0-9 Nsts=1 and 2 – 802.11n—MCS0-15 ▪ 20/40/80 MHz channel bandwidths support ▪ On-chip gain selectable LNA with optimized noise figure and power consumption ▪ Internal PA with optimized gain distribution for linearity and noise performance ▪ Support Wild variety of WLAN encryption: TKIP/WEP/AES
Advanced Bluetooth	▪ Bluetooth 4.2 (BDR/EDR/LE), Bluetooth Class 1 ▪ Bluetooth 5 ready ▪ Supports the following data rates: 1 Mbps (GFSK), 2 Mbps (π /4-DQPSK), 3 Mbps (8-DPSK) ▪ Digital audio interface with PCM/TDM interface for voice application ▪ Adaptive Frequency Hopping (AFH) using Package Error Rate (PER) ▪ Standard SDIO or UART HCI transport layer ▪ WLAN/Bluetooth coexistence protocol support ▪ Shared LNA with WLAN/Bluetooth ▪ Encryption (AES) support

© Copyright 2019 Laird. All Rights Reserved
Americas: +1-800-492-2320
Europe: +44-1628-858-940
Hong Kong: +852 2923 0610

4 SPECIFICATIONS

Table 2: Specifications

Feature	Description
Physical Interface	84-pin LGA package (including 16 thermal ground pad under the package)
Wi-Fi Interface	1-bit or 4-bit Secure Digital I/O; PCIe v2.0 Gen1/Gen2 (2.5/5 Gbps); USB 2.0
Bluetooth/ BLE Interface	Host Controller Interface (HCI) using High Speed UART, USB 2.0 **Strap Value CONFIG_HOST[2-0]** / **WLAN** / **Bluetooth /BLE** / **ROM Notes** 010 / PCIe / USB 2.0 / - 011 / PCIe / UART / -
Main Chip	Marvell 88W8997 (WLAN/BT); Marvell 88PG823 (PMU)
Input Voltage Requirements	DC 3.3 V ±10%
I/O Signalling Voltage	DC 1.8 V ± 10%
Peak Current consumption, **VCC**= 3.3 volts **VIO**= 1.8 volts (At maximum transmit power setting) *(Measured transmit current under 99% duty cycle)* ***Note:*** *Reset refers to the radio are in reset, both Wi-fi and BT reset are asserted.*	**MIMO 2x 2 operations.** **802.11b (with BT in standby) @ 18 dBm 1 Mbps** Transmit: 1050 mA Receive: 520 mA **802.11g (with BT in standby) @ 18 dBm 6 Mbps** Transmit: 980 mA Receive: 520 mA **802.11a (with BT in standby) @ 18 dBm 6 Mbps** Transmit: 1100 mA Receive: 580 mA **802.11n (2.4 GHz/40 MHz) (with BT in standby) @ 16 dBm MCS0** Transmit: 850 mA Receive: 520 mA **802.11n (5.0 GH/40 MHz) (with BT in standby) @ 16 dBm MCS0** Transmit: 900 mA Receive: 600 mA **802.11ac (5.0 GH/80 MHz) (with BT in standby) @ 14 dBm MCS0** Transmit: 850 mA Receive: 600 mA **Bluetooth (with Wi-Fi in standby)** Transmit: 120 mA Receive: 100 mA Reset: **90** mA
Operating Temperature	-30° to 85°C (-22° to 185°F)
Operating Humidity	10 to 90% (non-condensing)
Storage Temperature	-40° to 85°C (-40° to 185°F)
Storage Humidity	10 to 90% (non-condensing)
Maximum Electrostatic Discharge	Conductive 4KV; Air coupled 8KV follow EN61000-4-2
Size	22 mm (length) x 30 mm (width) x 3.3 mm (thickness)
Weight	TBD g

© Copyright 2019 Laird. All Rights Reserved
Americas: +1-800-492-2320
Europe: +44-1628-858-940
Hong Kong: +852 2923 0610

Feature	Description
Wi-Fi Media	Direct Sequence-Spread Spectrum (DSSS) Complementary Code Keying (CCK) Orthogonal Frequency Divisional Multiplexing (OFDM)
Bluetooth Media	Frequency Hopping Spread Spectrum (FHSS)
Wi-Fi Media Access Protocol	Carrier sense multiple access with collision avoidance (CSMA/CA) A-MPDU Rx (De-aggregation) and Tx (aggregation) (802.11ac single-MPDU A-MPDU)
Network Architecture Types	Infrastructure and ad-hoc
Wi-Fi Standards	IEEE 802.11a, 802.11b, 802.11d*, 802.11e, 802.11g, 802.11h, 802.11i, 802.11k*, 802.11n, 802.11r, 802.11v*, 802.11ac * Summit version only
Bluetooth Standards	Bluetooth version 2.1 with Enhanced Data Rate Bluetooth 4.2 (Bluetooth Low Energy or BLE) Bluetooth 5 (coming soon)
Wi-Fi Data Rates Supported	Support 802.11 ac/a/b/g/n 2X2 MIMO MU-MIMO/802.11ac Wave 2 802.11b (DSSS, CCK) 1, 2, 5.5, 11 Mbps 802.11a/g (OFDM) 6, 9, 12, 18, 24, 36, 48, 54 Mbps 802.11n (OFDM, HT20/HT40, MCS 0-15) 802.11ac (OFDM, HT20, MCS0-8; OFDM HT40/HT80, MCS 0-9)
Modulation Table	BPSK, QPSK, CCK, 16-QAM, 64-QAM, and 256-QAM.

802.11ac 802.11n	HT MCS Index	VHT MCS Index	Spatial Streams	Modulation	Coding	20 MHz		40 MHz		80 MHz	
						No SGI	SGI	No SGI	SGI	No SGI	SGI
	0	0	1	BPSK	1/2	6.5	7.2	13.5	15	29.3	32.5
	1	1	1	QPSK	1/2	13	14.4	27	30	58.5	65
	2	2	1	QPSK	3/4	19.5	21.7	40.5	45	87.8	97.5
	3	3	1	16-QAM	1/2	26	28.9	54	60	117	130
	4	4	1	16-QAM	3/4	39	43.3	81	90	175.5	195
	5	5	1	64-QAM	2/3	52	57.8	108	120	234	260
	6	6	1	64-QAM	3/4	58.5	65	121.5	135	263.3	292.5
	7	7	1	64-QAM	5/6	65	72.2	135	150	292.5	325
		8	1	256-QAM	3/4	78	86.7	162	180	351	390
		9	1	256-QAM	5/6	N/A	N/A	180	200	390	**433.3**
	8	0	2	BPSK	1/2	13	14.4	27	30	58.5	65
	9	1	2	QPSK	1/2	26	28.9	54	60	117	130
	10	2	2	QPSK	3/4	39	43.3	81	90	175.5	195
	11	3	2	16-QAM	1/2	52	57.8	108	120	234	260
	12	4	2	16-QAM	3/4	78	86.7	162	180	351	390
	13	5	2	64-QAM	2/3	104	115.6	216	240	468	520
	14	6	2	64-QAM	3/4	117	130.3	243	270	526.5	585
	15	7	2	64-QAM	5/6	130	144.4	270	300	585	650
		8	2	256-QAM	3/4	156	173.3	324	360	702	180
		9	2	256-QAM	5/6	N/A	N/A	360	400	780	**866.7**

© Copyright 2019 Laird. All Rights Reserved
Americas: +1-800-492-2320
Europe: +44-1628-858-940
Hong Kong: +852 2923 0610

Feature	Description
802.11ac/n Spatial Streams	2 (2x2 MIMO)
Bluetooth Data Rates Supported	1, 2, 3 Mbps
Bluetooth Modulation	GFSK@ 1 Mbps Pi/4-DQPSK@ 2 Mbps 8-DPSK@ 3 Mbps
Regulatory Domain Support	FCC (Americas, Parts of Asia, and Middle East) ETSI (Europe, Middle East, Africa, and Parts of Asia) IC (Industry Canada) MIC (Japan) (formerly TELEC) – Option KC (Korea) (formerly KCC) – Option
2.4 GHz Frequency Bands	**ETSI:** 2.4 GHz to 2.483 GHz **FCC:** 2.4 GHz to 2.473 GHz **MIC:** 2.4 GHz to 2.495 GHz **KC:** 2.4 GHz to 2.483 GHz
2.4 GHz Operating Channels (Wi-Fi)	**ETSI:** 13 (3 non-overlapping) **FCC:** 11 (3 non-overlapping) **MIC:** 14 (4 non-overlapping) **KC:** 13 (3 non-overlapping)
5 GHz Frequency Bands	**ETSI** 5.15 GHz to 5.35 GHz (Ch 36/40/44/48/52/56/60/64) 5.47 GHz to 5.725 GHz (Ch 100/104/108/112/116/120/124/128/132/136/140/144) **FCC** 5.15 GHz to 5.35 GHz (Ch 36/40/44/48/52/56/60/64) 5.47 GHz to 5.725 GHz (Ch 100/104/108/112/116/120/124/128/132/136/140/144 5.725 GHz to 5.825 GHz(Ch 149/153/157/161/165) **MIC (Japan)** 5.15 GHz to 5.35 GHz (Ch 36/40/44/48/52/56/60/64) 5.47 GHz to 5.725 GHz (Ch 100/104/108/112/116/120/124/128/132/136/140/144) **KC** 5.15 GHz to 5.35 GHz (Ch 36/40/44/48/52/56/60/64) 5.47 GHz to 5.725 GHz (Ch 100/104/108/112/116/120/124) 5.725 GHz to 5.825 GHz (Ch 149/153/157/161/165)
5 GHz Operating Channels (Wi-Fi)	**ETSI:** 19 non-overlapping; **FCC:** 24 non-overlapping **MIC (Japan):** 19 non-overlapping; **KC:** 20 non-overlapping
Transmit Power ***Note:*** *Transmit power on each channel varies according to individual country regulations. All values are nominal*	**802.11a** 6 Mbps — 18 dBm (63 mW) 54 Mbps — 16 dBm (40 mW) **802.11b** 1 Mbps — 18 dBm (63 mW) 11 Mbps — 18 dBm (63 mW) **802.11g** 6 Mbps — 18 dBm (63 mW) 54 Mbps — 16 dBm (40 mW)

© Copyright 2019 Laird. All Rights Reserved
Americas: +1-800-492-2320
Europe: +44-1628-858-940
Hong Kong: +852 2923 0610

Feature	Description		
with +/-2 dBm tolerance at room temperature. *Tolerance could be up to +/-2.5 dBm across operating temperature.* ***Note:*** *HT20 – 20 MHz-wide channels* *HT40 – 40 Mhz-wide channels* *HT80 – 80 MHz-wide channels*	**802.11n (2.4/5 GHz)**		
	6.5 Mbps (MCS0-5/MCS8-13;HT20)	18 dBm (63 mW)	
	65 Mbps (MCS6-7/MCS14-15;HT20)	16 dBm (40 mW)	
	13.5Mbps(MCS0-5/MCS8-13;HT40)	16 dBm (40 mW)	
	135Mbps (MCS6-7/MCS14-15;HT40)	14 dBm (25 mW)	
	802.11ac (5 GHz)		
	6.5/13 Mbps (MCS0-6;Ntst=1,2;HT20)	18 dBm (63 mW)	
	78/156 Mbps (MCS7-8;Ntst=1,2;HT20)	16 dBm (40 mW)	
	13.5/27Mbps (MCS0-6;Ntst=1,2;HT40)	16 dBm (40 mW)	
	180/360Mbps (MCS7-9;Ntst=1,2;HT40)	14 dBm (25 mW)	
	29.3/58.5 Mbps (MCS0-5;Ntst=1,2;HT80)	14 dBm (25 mW)	
	263.3/526.5 Mbps (MCS6-8;Ntst=1,2;HT80)	12 dBm (15.8 mW)	
	390/780 Mbps (MCS9;Ntst=1,2;HT80)	10 dBm (10 mW)	
	Bluetooth		
	1 Mbps (1DH5)	10 dBm (12.5 mW)	
	2 Mbps	7 dBm (6.3 mW)	
	3 Mbps	7 dBm (6.3 mW)	
	BLE (1 Mbps)	7 dBm (6.3 mW)	
Typical Receiver Sensitivity (PER <= 10%) ***Note:*** *All values nominal, +/-3 dBm.* *Sensitivity on CH13 (WLAN)/CH78 (BT) will decade up to 4-6dB.*	**802.11a:**		
	6 Mbps	-89 dBm	
	54 Mbps	-74 dBm	
	802.11b:		
	1 Mbps	-95 dBm	
	11 Mbps	-90 dBm	(PER<8%)
	802.11g:		
	6 Mbps	-91 dBm	
	54 Mbps	-75 dBm	
	802.11n (2.4 GHz)		
	6.5 Mbps (MCS0;HT20)	-91 dBm	
	65 Mbps (MCS7;HT20)	-73 dBm	
	13.5Mbps(MCS0;HT40)	-85 dBm	
	135Mbps (MCS7;HT40)	-70 dBm	
	802.11n (5 GHz)		
	6.5 Mbps (MCS0;HT20)	-89 dBm	
	65 Mbps (MCS7;HT20)	-70 dBm	
	13.5Mbps(MCS0;HT40)	-86 dBm	
	135Mbps (MCS7;HT40)	-69 dBm	
	802.11ac (5 GHz)		
	6.5 Mbps (MCS0;HT20)	-89 dBm	
	78 Mbps (MCS8;HT20)	-67 dBm	
	13.5 Mbps (MCS0;HT40)	-86 dBm	
	180 Mbps (MCS9;HT40)	-63 dBm	
	29.3 Mbps (MCS0;HT80)	-81 dBm	
	390/780 Mbps (MCS9;HT80)	-60 dBm	
	Bluetooth:		
	1 Mbps (1DH5)	-95 dBm	
	2Mbps (2DH5)	-94 dBm	
	3 Mbps (3DH5)	-88 dBm	
	BLE	-95 dBm	

© Copyright 2019 Laird. All Rights Reserved
Americas: +1-800-492-2320
Europe: +44-1628-858-940
Hong Kong: +852 2923 0610

Feature	Description
Operating Systems Supported	Linux Kernel Android
Security	**Standards** Wireless Equivalent Privacy (WEP) Wi-Fi Protected Access (WPA) IEEE 802.11i (WPA2) **Encryption** Wireless Equivalent Privacy (WEP, RC4 Algorithm) Temporal Key Integrity Protocol (TKIP, RC4 Algorithm) Advanced Encryption Standard (AES, Rijndael Algorithm) Encryption Key Provisioning Static (40-bit and 128-bit lengths) Pre-Shared (PSK) **Dynamic** 802.1X Extensible Authentication Protocol Types EAP-FAST PEAP-MSCHAPv2 EAP-TLS PEAP-TLS EAP-TTLS LEAP PEAP-GTC ***Note:*** *EAP types are supplicant software dependent.*
Compliance ***Note:*** *All regulatory certifications are currently pending.*	**ETSI Regulatory Domain** EN 300 328 EN 301 489-1 EN 301 489-17 EN 301 893 EN 60950-1 EU 2002/95/EC (RoHS) **FCC Regulatory Domain** FCC 15.247 DTS – 802.11b/g (Wi-Fi) – 2.4 GHz FCC 15.407 UNII – 802.11a (Wi-Fi) – 5 GHz FCC 15.247 DSS – BT 2.1 **Industry Canada** RSS-247 – 802.11a/b/g/n (Wi-Fi) – 2.4 GHz, 5.8 GHz, 5.2 GHz, and 5.4 GHz RSS-247 – BT 2.1
Certifications	**Wi-Fi Alliance** (Summit version only) 802.11a, 802.11b, 802.11g , 802.11n, 802.11ac WPA Enterprise WPA2 Enterprise **Cisco Compatible Extensions** (Version 4) (Summit version only) ***Bluetooth®* SIG Qualification**
Warranty	Three Year Warranty

All specifications are subject to change without notice

© Copyright 2019 Laird. All Rights Reserved
Americas: +1-800-492-2320
Europe: +44-1628-858-940
Hong Kong: +852 2923 0610

5 WLAN Functional Description

The 60-2230C-P/60-2230C-PU M.2 module is designed based on the 60-SIPT SiP. It is optimized for high-speed, reliable, and low-power embedded applications. It is integrated with dual-band WLAN (2.4 GHz/5 GHz) and Bluetooth 4.2. Its functionality includes the following:

- Improved throughput on the link due to frame aggregation, RIFS (reduced inter-frame spacing), and half-guard intervals.
- Support for STBC (Space Time Block Codes) and LDPC (Low Density Parity Check) codes.
- Improved 11n performance due to features such as 11n frame aggregation (A-MPDU and A-MSDU) and low-overhead host-assisted buffering (RX A-MSDU and RX A-MPDU). These techniques can improve performance and efficiency of applications involving large bulk data transfers such as file transfers or high-resolution video streaming.
- IEEE 802.11 ac (Wave 2), 2X2 receive Multi-User MIMIO (MU-MIMO) spatial stream multiplexing with data rate up to MCS9 (866.7 Mbps).

Additional functionality is listed in Table 3.

Table 3: WLAN functions

Feature	Description
WLAN MAC	▪ Frame Exchange at the MAC level to deliver data ▪ Received frame filtering and validation (Cyclic Redundancy Check (CRC)) ▪ Generation of MAC header and trailer information (MAC protocol Data Units (MPDUs)) ▪ Fragmentation of data frames (MAC Service Data Units (MSDUs) ▪ Access Mechanism support for fair access to shared wireless medium through (DCF and EDCA) ▪ A-MPDU Aggregation/Deaggregation (support 802.11ac single –MPDU A-MPDU) ▪ 20/40/80 MHz channel Coexistence ▪ RIFS Burst Receive ▪ Management Information Base ▪ Radio Resource Measurement ▪ Quality of Service ▪ Block Acknowledgement ▪ 802.11ac Downlink MU-MIMO (receive) ▪ Dynamic Frequency Selection ▪ Beamforming ▪ TIM Frame TX and RX ▪ Multi-BSS/Station ▪ Transmit Rate Adaptation. ▪ Transmit Power Control

© Copyright 2019 Laird. All Rights Reserved
Americas: +1-800-492-2320
Europe: +44-1628-858-940
Hong Kong: +852 2923 0610

Feature	Description
WLAN Base Band	▪ 802.11ac 2x2 MU-MIMO (with on-chip Marvell RF radio) ▪ Backward compatibility with legacy 802.11 n/a/b/g technology ▪ WLAN/Bluetooth LNA sharing ▪ PHY rate up to 866.7Mbps ▪ 20MHz bandwidth/channel, 40MHz bandwidth/channel, upper/lower 20MHz packets in 40MHz channel, 20MHz duplicate legacy packets in 40MHz channel operation ▪ 80MHz bandwidth/channel, 4 positions of 20MHz packets in 80MHz channel, upper/lower 40MHz packets in 80MHz channel, 20MHz quadruplicate legacy packets in 80MHz channel mode operation ▪ Modulation and Coding Scheme (MCS): 802.11 ac (MCS0-9. Nsts=1/2); 802.11n (MCS0-15) ▪ 802.11 K Radio Resource Measurement ▪ 802.11ac /802.11n optional MIMO features: – 20/40/80 MHz Coexistence with middle-packaged detection (GI detection) for enhanced CCA. – 1 spatial stream STBC reception and transmission – LDPC transmission and reception for 802.11ac and 802.11n – 256 QAM (MCS8-9) modulations supported – Short guard interval – RIFS on receive path for 802.11n packets – 802.11n Greenfield TX/RX ▪ Power Save Feature
WLAN Security	WLAN Encryption features supported include: ▪ Temporal Key Integrity Protocol (TKIP)/Wired Equivalent Privacy (WEP) ▪ Advanced Encryption Standard (AES)/Counter-Mode/CBC-MAC Protocol (CCMP) ▪ Advanced Encryption Standard (AES)/Cipher-Based Message Authentication Code (CMAC) ▪ Advanced Encryption Standard (AES)/Galois/Counter Mode Protocol (GCMP) ▪ WLAN Authentication and Private Infrastructure (WPAI)

© Copyright 2019 Laird. All Rights Reserved
Americas: +1-800-492-2320
Europe: +44-1628-858-940
Hong Kong: +852 2923 0610

Feature	Description
WLAN Channel	Channel frequency supported.

20 MHz				40 MHz		80 MHz	
Channel	**Freq. (MHz)**	**Channel**	**Freq. (MHz)**	**Channel**	**Freq. (MHz)**	**Channel**	**Freq. (MHz)**
1	2412	36	5180	1-5	2422	42	5210
2	2417	40	5200	2-6	2427	58	5290
3	2422	44	5220	3-7	2432	74	5370
4	2427	48	5240	4-8	2437	90	5410
5	2432	52	5260	5-9	2422	106	5530
6	2437	56	5280	6-10	2447	122	5610
7	2422	60	5300	7-11	2452	138	5690
8	2447	64	5320	36-40	5190	155	5775
9	2452	100	5500	44-48	5230		
10	2457	104	5520	52-56	5270		
11	2462	108	5540	60-64	5310		
12	2467	112	5560	68-72	5350		
13	2472	116	5580	76-80	5390		
		120	5600	84-88	5430		
		124	5620	92-96	5470		
		128	5640	100-104	5510		
		132	5660	108-112	5550		
		136	5680	116-120	5590		
		140	5700	124-128	5630		
		144	5720	132-136	5670		
		149	5745	140-144	5710		
		153	5765	149-153	5755		
		157	5785	157-161	5795		
		161	5805				
		165	5825				

© Copyright 2019 Laird. All Rights Reserved
Americas: +1-800-492-2320
Europe: +44-1628-858-940
Hong Kong: +852 2923 0610

6 Bluetooth Functional Description

The 60-2230C-P/60-2230C-PU Bluetooth (BT) block is based on the 60-SIPT SiP that already has fully-integrated Bluetooth baseband and radio. Several features and functions are listed in Table 4.

Table 4: Bluetooth functions

Feature	Description
Bluetooth Interface	Voice interface: ▪ Hardware support for continual PCM data transmission/reception without processor overhead. ▪ Standard PCM clock rates from 64 kHz to 2.048 MHz with multi-slot handshake and synchronization. ▪ A-law, U-law, and linear voice PCM encoding/decoding. ▪ High-Speed UART interface – 60-2230C-P only ▪ USB 2.0 – 60-2230C-PU only
Bluetooth Core functionality	▪ Bluetooth 4.2 ▪ Bluetooth Class 2/Bluetooth class 1 ▪ WLAN and Bluetooth share same LNA and antenna ▪ Digital audio interfaces with PCM/TDM interface for voice application ▪ Baseband and radio BDR and EDR package type: 1Mbps, 2Mbps, 3Mbps ▪ Fully functional Bluetooth baseband: AFH, forward error correction, header error control, access code correction, CRC, encryption bit stream generation, and whitening ▪ Adaptive Frequency Hopping (AFH) using Packet Error Rate (PER) ▪ Interlaced scan for faster connection setup ▪ Simultaneous active ACL connection setup ▪ Automatic ACL package type selection ▪ Full master and slave piconet support ▪ Scatter net support ▪ SCO/eSCO links with hardware accelerated audio signal processing and hardware supported PPEC algorithm for speech quality improvement ▪ All standard SCO/eSCO voice coding ▪ All standard pairing, authentication, link key, and encryption operations ▪ Encryption (AES) support
Bluetooth Low Energy (BLE) Core functionality	▪ Advertiser, Scanner, Initiator, Master, and Slave roles support (connects up to 16 links) ▪ WLAN/Bluetooth Coexistence (BCA) protocol support ▪ Shared RF with BDR/EDR ▪ Encryption (AES) support ▪ Intelligent Adaptive Frequency Hopping (AFH) ▪ LE privacy 1.2 ▪ LE Secure Connection ▪ LE Data Length Extension ▪ LE Advertising Length Extension ▪ 2 Mbps LE

© Copyright 2019 Laird. All Rights Reserved
Americas: +1-800-492-2320
Europe: +44-1628-858-940
Hong Kong: +852 2923 0610

7 Block Diagram

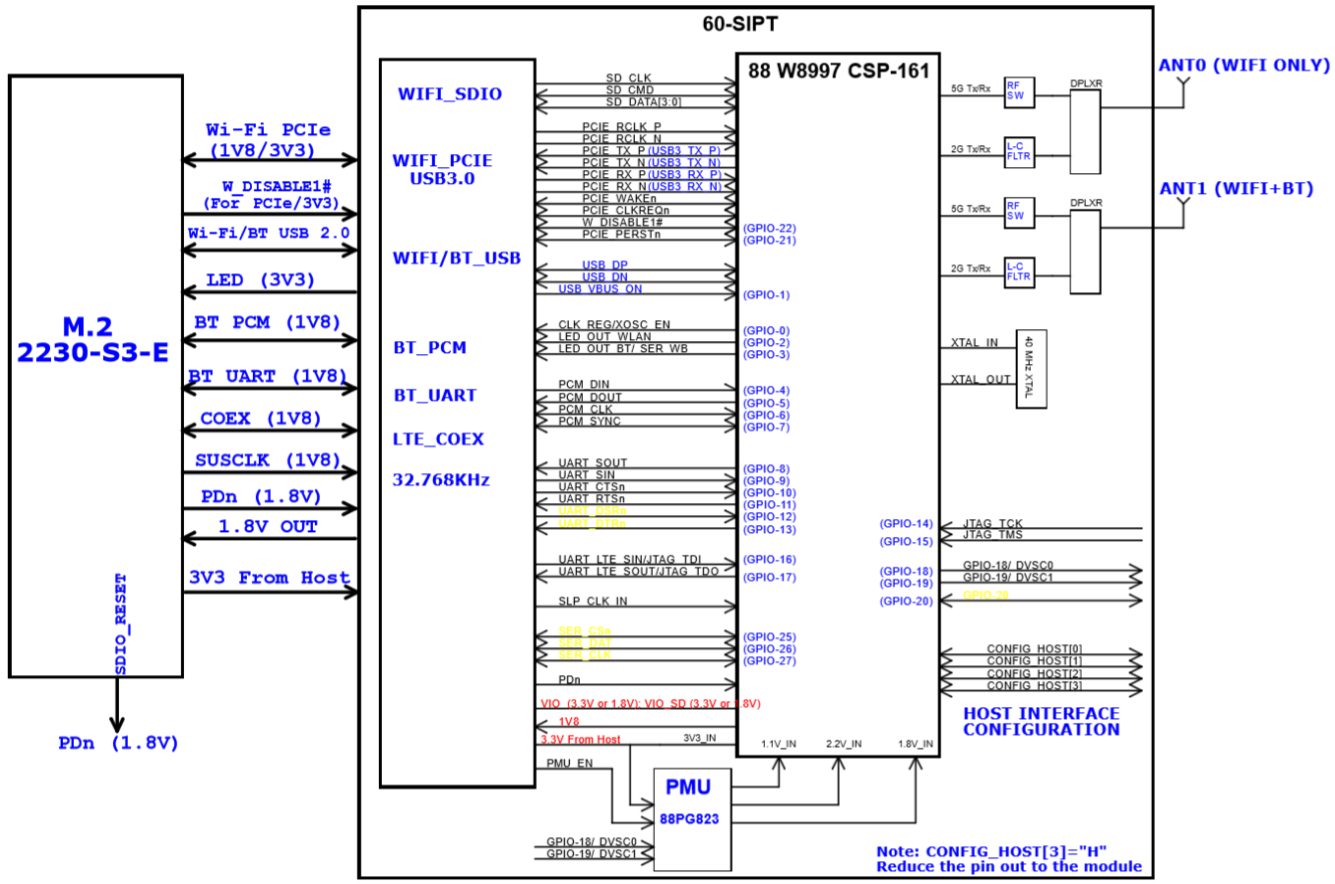

Figure 1: Block Diagram of 60-2230C-P/60-2230C-PU

© Copyright 2019 Laird. All Rights Reserved
Americas: +1-800-492-2320
Europe: +44-1628-858-940
Hong Kong: +852 2923 0610

8 Electrical Characteristics

8.1 Absolute Maximum Ratings

Table 5 summarizes the absolute maximum ratings and Table 6 lists the recommended operating conditions for the 60-2230C-P/60-2230C-PU. Absolute maximum ratings are those values beyond which damage to the device can occur. Functional operation under these conditions, or at any other condition beyond those indicated in the operational sections of this document, is not recommended.

Note: Maximum rating for signals follows the supply domain of the signals.

Table 5: Absolute maximum ratings

Symbol (Domain)	Parameter	Max Rating	Unit
VIO	I/O configuration power supply (1.8V system)	2.2	V
3V3	External 3.3V power supply	4.0	V
Storage	Storage Temperature	-40 to +85	°C
ANT0; ANT1	Maximum RF input (reference to 50-Ω input)	+10	dBm
ESD	Electrostatic discharge tolerance	2000	V

8.2 Recommended Operating Conditions

Table 6: Recommended Operating Conditions

Symbol (Domain)	Parameter	Min	Typ	Max	Unit
VIO	WLAN and BT GPIO I/O power supply	1.62	1.8	1.98	V
3V3	External 3.3V power supply	2.97	3.30	3.63	V
T-ambient	Ambient temperature	-30	25	85	°C

8.3 DC Electrical Characteristics

Table 7 list the general DC electrical characteristics over recommended operating conditions (unless otherwise specified).

Table 7: General DC electrical characteristics (For 1.8V operation VIO)

Symbol	Parameter	Conditions	Min	Typ	Max	Unit
VIH	High Level Input Voltage	--	0.7 x 1V8		1V8+0.4	V
VIL	Low Level Input Voltage	--	-0.4		0.3 x 1V8	V
VHYS	Input Hysteresis	--	100			mV
VOH	Output high Voltage	--	1V8-0.4			V
VOL	Output low Voltage	--			0.4	V

© Copyright 2019 Laird. All Rights Reserved
Americas: +1-800-492-2320
Europe: +44-1628-858-940
Hong Kong: +852 2923 0610

8.4 WLAN Radio Receiver Characteristics

Table 8 and Table 9 summarize the WLAN 60-2230C-P/60-2230C-PU receiver characteristics.

Table 8: WLAN receiver characteristics for 2.4 GHz signal chain operation

Symbol	Parameter	Conditions	Min	Typ	Max	Unit
Frx	Receive input frequency range		2.412		2.484	GHz
Srf	Sensitivity					
	CCK, 1 Mbps	See Note[3]		-95		dBm
	CCK, 11 Mbps			-90		
	OFDM, 6 Mbps			-91		
	OFDM, 54 Mbps			-75		
	HT20, MCS0			-91		
	HT20, MCS7			-73		
Radj	Adjacent channel rejection					
	OFDM, 6 Mbps	See Note[4]		TBD		dB
	OFDM, 54 Mbps			TBD		
	HT20, MCS0			TBD		
	HT20, MCS7			TBD		

[3]Performance data are measured under signal chain operation.

[4]Performance data are measured under signal chain operation.

Table 9: WLAN receiver characteristics for 5 GHz dual chain operation

Symbol	Parameter	Conditions	Min	Typ	Max	Unit
Frx	Receive input frequency range		5.15		5.825	GHz
Srf	Sensitivity					
	OFDM, 6 Mbps	See Note[5]		-89		dBm
	OFDM, 54 Mbps			-74		
	HT20, MCS0			-89		
	HT20, MCS7			-70		
	HT40, MCS0			-86		
	HT40, MCS7			-69		
Radj	Adjacent channel rejection					
	OFDM, 6 Mbps	See Note[6]		TBD		dB
	OFDM, 54 Mbps			TBD		
	HT20, MCS0			TBD		
	HT20, MCS7			TBD		

[5]Performance data are measured under signal chain operation

[6]Performance data are measured under signal chain operation.

© Copyright 2019 Laird. All Rights Reserved
Americas: +1-800-492-2320
Europe: +44-1628-858-940
Hong Kong: +852 2923 0610

8.5 WLAN Transmitter Characteristics

Table 10: WLAN transmitter characteristics for 2.4 GHz per chain operation

Symbol	Parameter	Conditions	Min	Typ	Max	Unit
Ftx	Transmit output frequency range		2.412		2.484	GHz
Pout	Output power	See Note[7]				
	11b mask compliant	1-11Mbps		18		dBm
	11g mask compliant	6-36Mbps		18		
	11g EVM compliant	48-54Mbps		16		
	11n HT20 mask compliant	MCS0-5/MCS8-13		18		
	11n HT20 EVM compliant	MCS6-7/MCS14-15		16		
	11n HT40 mask compliant	MCS0-5/MCS8-13		16		
	11n HT40 EVM compliant	MCS6-7/MCS14-15		14		
ATx	Transmit power accuracy at 25 ℃	-	-	+ 2.0		dB

Freq.	Mode/Rate (Mbps)	Output Power Per Chain (dBm)	Max. Current Consumption	
			Single Chain (mA)[8]	Dual Chains (mA)[8]
2412 MHz	1 Mbps	18dBm	340	620
	54 Mbps	16dBm	280	500
	HT20 MCS7	16dBm	280	510
2442 MHz	1 Mbps	18dBm	340	620
	54 Mbps	16dBm	280	500
	HT20 MCS7	16dBm	280	510
2472 MHz	1 Mbps	18dBm	340	620
	54 Mbps	16dBm	280	500
	HT20 MCS7	16dBm	280	510

Table 11: WLAN transmitter characteristics for 5 GHz per chain operation

Symbol	Parameter	Conditions	Min	Typ	Max	Unit
Ftx	Transmit output frequency range		5.15		5.925	GHz
Pout	Output power	See Note[3]				
	11a mask compliant	6-36Mbps		18		dBm
	11a EVM compliant	48-54Mbps		16		
	11n HT20 mask compliant	MCS0-5/MCS8-13		18		
	11n HT20 EVM compliant	MCS6-7/MCS14-15		16		
	11n HT40 mask compliant	MCS0-5/MCS8-13		16		
	11n HT40 EVM compliant	MCS6-7/MCS14-15		16		
	11ac HT20 mask compliant	MCS0-6 (Ntst=1,2)		18		
	11ac HT20 EVM compliant	MCS7-8(Ntst=1,2)		16		
	11ac HT40 mask compliant	MCS0-5 (Ntst=1,2)		16		
	11ac HT40 EVM compliant	MCS6-9(Ntst=1,2)		14		
	11ac HT80 mask compliant	MCS0-5 (Ntst=1,2)		14		

© Copyright 2019 Laird. All Rights Reserved
Americas: +1-800-492-2320
Europe: +44-1628-858-940
Hong Kong: +852 2923 0610

Symbol	Parameter	Conditions	Min	Typ	Max	Unit
	11ac HT80 EVM compliant	MCS6-8(Ntst=1,2)		12		
	11ac HT80 EVM compliant	MCS9(Ntst=1,2)		10		
ATx	Transmit power accuracy at 25 ℃	-	-	+ 2.0		dB

Freq.	Mode/Rate [Mbps]	Output Power Per Chain [dBm]	Max. Current Consumption	
			Single Chain (mA)[8]	Dual Chains (mA)[8]
5180 MHz	6 Mbps	18 dBm	400	710
	54 Mbps	16 dBm	330	610
	HT20 MCS0	18 dBm	400	720
	HT20 MCS7	16 dBm	360	620
5190 MHz	HT40 MCS7	14 dBm	320	550
5500 MHz	6 Mbps	18 dBm	380	680
	54 Mbps	16 dBm	330	600
	HT20 MCS0	18 dBm	370	690
	HT20 MCS7	16 dBm	320	600
5510 MHz	HT40 MCS7	14 dBm	300	530
5825 MHz	6 Mbps	18 dBm	380	690
	54 Mbps	16 dBm	310	600
	HT20 MCS0	18 dBm	360	710
	HT20 MCS7	16 dBm	340	550
5795 MHz	HT40 MCS7	14 dBm	300	530

[7]Performance data are measured under single chain operation.

Note: Final TX power values on each channel are limited by the regulatory certification test limit.

© Copyright 2019 Laird. All Rights Reserved
Americas: +1-800-492-2320
Europe: +44-1628-858-940
Hong Kong: +852 2923 0610

9 Bluetooth Radio Characteristics

Table 11 through Table 14 describe the basic rate transmitter performance, enhanced data transmitter performance, basic rate receiver performance, enhanced rate receiver performance, and current consumption conditions at 25°C.

Table 11: Basic rate transmitter performance temperature at 25°C (1.8V)

Test Parameter		Min	Typ	Max	BT Spec.	Unit
Maximum RF Output Power		8	10	11	0 ~ +20	dBm
Frequency Range		2.4	—	2.4835	2.4 ≤ f ≤ 2.4835	GHz
20 dB Bandwidth		—	919.5	—	≤ 1000	KHz
Δf1avg Maximum Modulation		140	165	175	140 < Δf1avg < 175	KHz
Δf2max Minimum Modulation		—	135	—	≥ 115	KHz
Δf2avg/Δf1avg		—	0.9	—	≥ 0.80	—
Initial Carrier Frequency		—	+/-5	—	≤±75	KHz
Drift Rate (DH1 package)		—	4	—	≤ 20	KHz/50 µs
Drift (DH3 packet)		—	8	—	≤25	KHz
Drift (DH5 packet)		—	7	—	≤ 40	KHz
Adjacent Channel Power	F≥ ± 3MHz	—	–50	—	< –40	dBm
	F = ± 2MHz	—	-46	—	≤ –20	dBm
	F = ± 1MHz	—	-15	—	N/A	dBm

Table 12: Enhanced data rate transmitter performance 25°C (1.8V)

Test Parameter		Min	Typ	Max	BT Spec.	Unit
Relative Transmit Power		5	7	9		dBm
Max Carrier Frequency Stability |wo|	2-DH5	—	1	—	≤ ±10	KHz
	3-DH5	—	1	—		
Max Carrier Frequency Stability |wi|	2-DH5	—	4	—	≤ ±75	KHz
	3-DH5	—	4	—		
Max Carrier Frequency Stability |w0+wi|	2-DH5	—	5	—	≤ ±75	KHz
	3-DH5	—	5	—		
RMS DEVM	2-DH5	—	4	—	≤ 20	%
	3-DH5	—	4	—	≤13	%
Peak DEVM	2-DH5	—	9	—	≤ 35	%
	3-DH5	—	9	—	≤ 25	%
99% DEVM	2-DH5	—	12	—	≤ 30	%
	3-DH5	—	12	—	≤ 20	%
EDR Differential Phase Encoding		—	99	—	≥ 99	%
Adjacent Channel Power	F≥ ± 3MHz	—	TBD	—	< –40	dBm
	F = ± 2MHz	—	TBD	—	≤ –20	dBm

© Copyright 2019 Laird. All Rights Reserved
Americas: +1-800-492-2320
Europe: +44-1628-858-940
Hong Kong: +852 2923 0610

Table 13: Basic rate receiver performance at 1.8V

Test Parameter		Min	Typ	Max	BT Spec.	Unit
Sensitivity (1DH5)	BER ≤ 0.1%	—	–95	-92	≤ –70	dBm
Maximum Input	BER ≤ 0.1%	–20	-10	—	≥ –20	dBm
Carrier-to-Interferer Ratio (C/I)	Co-Channel	—	10	11	11	
	C/I (± 1 MHz)	—	-4	0	0	dB
	C/I (± 2 MHz)	—	-45	—	–30	dB
	C/I (± 3 MHz)	—	-49	—	–40	dB
Maximum Level of Intermodulation Interferers		–39	-30	-	≥ –39	dBm

Table 14: Enhanced data rate receiver performance 1.8V

Test Parameter		Min	Typ	Max	Bluetooth Specification	Unit
Sensitivity (BER ≤0.01%)	π/4 DQPSK	—	-94	-91	≤ –70	dBm
	8 DPSK	—	-88	-85	≤ –70	dBm
Maximum Input (BER ≤0.1%)	π/4 DQPSK	–20	—	—	≥ –20	dBm
	8 DPSK	–20	—	—	≥ –20	dBm
Co-Channel C/I (BER ≤0.1%)	π/4 DQPSK	—	10	13	≤ ±13	dB
	8 DPSK	—	16	20	≤ ±20	dB
Adjacent Channel C/I (1 MHz)	π/4 DQPSK	—	-9	0	≤ 0	dB
	8 DPSK	—	-6	5	≤5	dB
Second Adjacent Channel C/I (2 MHz)	π/4 DQPSK	—	-47	–30	≤ –30	dB
	8 DPSK	—	-42	–25	≤ –25	dB
Third Adjacent Channel C/I (3 MHz)	π/4 DQPSK	—	-51	–40	≤ –40	dB
	8 DPSK	—	-48	–33	≤ –33	dB
Out-of-band blocking	30-2000MHz	—	-12.5	—	—	dBm
	2-2.399GHz	—	-12.4	—	—	dBm
	2.484-3GHz	—	-18	—	—	dBm
	3-12.75GHz	—	-2.6	—	—	dBm

© Copyright 2019 Laird. All Rights Reserved
Americas: +1-800-492-2320
Europe: +44-1628-858-940
Hong Kong: +852 2923 0610

10 PCIE SPECIFICATIONS

The 60-2230C-P/60-2230C-PU PCIe host interface pins are powered from the AVDD18 voltage supply. The PCI Express interface supports a x1 PCI Express interface (one Lane). A Lane consists of an input and an output high-speed differential pair. Also supported is a PCI Express reference clock. Refer to the PCI Express Base Specification for more details on the functional requirements for the PCI Express interface signals.

10.1 Differential Tx Output Electricals

NOTE: In accordance with PCI Express Base Specification, Revision 2.1 March 4, 2009.

Table 15: PCI Express Tx Output Specifications—2.5 GT/s

Symbol	Parameter	Min	Typ	Max	Units
UI	Unit interval (UI) The specified UI is equivalent to a tolerance of ±300 ppm for each Refclk source. Period does not account for SSC induced variations.	399.88	--	400.12	ps
$V_{Tx\text{-}DIFF\text{-}PP}$	Differential peak-to-peak Tx voltage swing VTx-DIFFpp = 2*|VTXD+ - VTXD-|	0.8	--	1.2	V
$V_{Tx\text{-}DIFF\text{-}PP\text{-}LOW}$	Low power differential peak-to-peak Tx voltage swing VTx-DIFFpp = 2*|VTXD+ - VTXD-|	0.4	--	1.2	V
$V_{Tx\text{-}DE\text{-}RATIO\text{-}3.5dB}$	Tx de-emphasis level ratio (3.5 dB)	3.0	--	4.0	dB
$T_{Tx\text{-}EYE}$	Tx eye including all jitter sources	0.75	--	--	UI
$T_{Tx\text{-}EYE\text{-}MEDIAN\text{-}to\text{-}MAX\text{-}JITTER}$	Maximum time between jitter median and maximum deviation from median	--	--	0.125	UI
$T_{Tx\text{-}RISE\text{-}FALL}$	Tx rise/fall time Measured differentially from 20% to 80% of swing.	0.125	--	--	UI
$RL_{Tx\text{-}DIFF}$	Tx package plus Si differential return loss	10	--	--	dB
$RL_{Tx\text{-}CM}$	Tx package plus Si common mode return loss	6	--	--	dB
$V_{Tx\text{-}CM\text{-}AC\text{-}P}$	Tx AC common mode voltage	--	20	--	mV
$I_{Tx\text{-}SHORT}$	Tx short circuit current limit	--	--	90	mA
$V_{Tx\text{-}DC\text{-}CM}$	Tx DC common mode voltage	0	--	3.6	V
$V_{Tx\text{-}CM\text{-}DC\text{-}ACTIVE\text{-}IDLE\text{-}DELTA}$	Absolute delta of DC common mode voltage during L0 and electrical idle	0	--	100	mV
$V_{Tx\text{-}IDLE\text{-}DIFF\text{-}AC\text{-}p}$	Electrical idle differential peak output voltage	0	--	20	mV
$V_{Tx\text{-}RCV\text{-}DETECT}$	Voltage change allowed during receiver detection	--	--	600	mV
$T_{Tx\text{-}IDLE\text{-}MIN}$	Minimum time spent in electrical idle	20	--	--	ns
$T_{Tx\text{-}IDLE\text{-}SET\text{-}TO\text{-}IDLE}$	Maximum time to transition to a valid electrical idle after sending an electrical idle ordered set	--	--	8	ns
$T_{Tx\text{-}IDLE\text{-}TO\text{-}DIFF\text{-}DATA}$	Maximum time to transition to valid diff signaling after leaving electrical idle	--	--	8	ns
$T_{CROSSLINK}$	Crosslink random timeout	--	--	1.0	ms
C_{Tx}	AC coupling capacitor	75	--	200	nF

© Copyright 2019 Laird. All Rights Reserved
Americas: +1-800-492-2320
Europe: +44-1628-858-940
Hong Kong: +852 2923 0610

Table 16: PCI Express Tx Output Specifications—5 GT/s

Symbol	Parameter	Min	Typ	Max	Units
UI	Unit interval (UI) The specified UI is equivalent to a tolerance of ±300 ppm for each Refclk source. Period does not account for SSC induced variations.	199.94	--	200.06	Ps
$V_{Tx\text{-}DIFFpp}$	Differential peak-to-peak Tx voltage swing $V_{Tx\text{-}DIFFpp} = 2*\lvert V_{TXD+} - V_{TXD-}\rvert$	0.8	--	1.2	V
$V_{Tx\text{-}DIFFpp\text{-}LOW}$	Low power differential peak-to-peak Tx voltage swing $V_{Tx\text{-}DIFFpp} = 2*\lvert V_{TXD+} - V_{TXD-}\rvert$	0.4	--	1.2	V
$V_{Tx\text{-}DE\text{-}RATIO\text{-}3.5dB}$	Tx de-emphasis level ratio (3.5 dB)	3.0	--	4.0	dB
$V_{Tx\text{-}DE\text{-}RATIO\text{-}6dB}$	Tx de-emphasis level ratio (6 dB)	5.5	--	6.5	dB
$T_{MIN\text{-}PULSE}$	Instantaneous lone pulse width Measured relative to rising/falling pulse.	0.9	--	--	UI
$T_{Tx\text{-}EYE}$	Tx eye including all jitter sources	0.75	--	--	UI
$T_{Tx\text{-}HF\text{-}DJ\text{-}DD}$	Tx deterministic jitter > 1.5 MHz Deterministic jitter only.	--	--	0.15	UI
$T_{Tx\text{-}LF\text{-}RMS}$	Tx RMS jitter < 1.5 MHz Total energy measured over a 10 kHz–1.5 MHz range.	--	3.0	--	Ps RMS
$T_{Tx\text{-}RISE\text{-}FALL}$	Tx rise/fall time Measured differentially from 20% to 80% of swing.	0.15	--	--	UI
$RL_{Tx\text{-}DIFF}$	Tx package plus Si differential return loss (0.05–1.25 GHz)	10	--	--	dB
	Tx package plus Si differential return loss (1.25–2.5 GHz)	8	--	--	
$RL_{Tx\text{-}CM}$	Tx package plus Si common mode return loss				dB
$V_{Tx\text{-}CM\text{-}AC\text{-}PP}$	Tx AC common mode voltage				mVPP
$I_{Tx\text{-}SHORT}$	Tx short circuit current limit				mA
$V_{Tx\text{-}DC\text{-}CM}$	Tx DC common mode voltage				V
$V_{Tx\text{-}CM\text{-}DC\text{-}ACTIVE\text{-}IDLE\text{-}DELTA}$	Absolute delta of DC common mode voltage during L0 and electrical idle				mV
$V_{Tx\text{-}IDLE\text{-}DIFF\text{-}AC\text{-}p}$	Electrical idle differential peak output voltage $V_{Tx\text{-}IDLE\text{-}DIFF\text{-}DC} = \lvert V_{Tx\text{-}Idle\text{-}D+} - V_{Tx\text{-}Idle\text{-}D-}\rvert \leq 20$ mV				mV
$V_{Tx\text{-}IDLE\text{-}DIFF\text{-}DC}$	DC electrical idle differential output voltage $V_{Tx\text{-}IDLE\text{-}DIFF\text{-}DC} = \lvert V_{Tx\text{-}Idle\text{-}D+} - V_{Tx\text{-}Idle\text{-}D-}\rvert \leq 5$ mV				mV
$V_{Tx\text{-}RCV\text{-}DETECT}$	Voltage change allowed during receiver detection				mV
$T_{Tx\text{-}IDLE\text{-}MIN}$	Minimum time spent in electrical idle				ns
$T_{Tx\text{-}IDLE\text{-}SET\text{-}TO\text{-}IDLE}$	Maximum time to transition to a valid electrical idle after sending an electrical idle ordered set	--	--	8	ns
$T_{Tx\text{-}IDLE\text{-}TO\text{-}DIFF\text{-}DATA}$	Maximum time to transition to valid differential signaling after leaving electrical idle	--	--	8	ns
$T_{CROSSLINK}$	Crosslink random timeout	--	--	1.0	ms
C_{Tx}	AC coupling capacitor	75	--	200	nF

© Copyright 2019 Laird. All Rights Reserved
Americas: +1-800-492-2320
Europe: +44-1628-858-940
Hong Kong: +852 2923 0610

10.2 Differential Rx Input Electricals

NOTE: In accordance with PCI Express Base Specification, Revision 2.1 March 4, 2009.

Table 17: PCI Express Rx Input Specifications—2.5 GT/s

Symbol	Parameter	Min	Typ	Max	Units
UI	Unit Interval (UI) UI does not account for SSC induced variations.	399.88	--	400.12	ps
$V_{Rx\text{-}DIFF\text{-}PP\text{-}CC}$	Differential Rx peak-to-peak voltage for common Refclk Rx architecture	0.175	--	1.2	V
$V_{Rx\text{-}DIFF\text{-}PP\text{-}DC}$	Differential Rx peak-to-peak voltage for data clocked Rx architecture	0.175	--	1.2	V
$T_{Rx\text{-}EYE}$	Rx eye time opening Minimum eye time at Rx pins to yield a 10-12 BER.	0.40	--	--	UI
$T_{Rx\text{-}EYE\text{-}MEDIAN\text{-}to\text{-}MAX\text{-}JITTER}$	Maximum time delta between median and deviation from median	--	--	0.3	UI
$V_{Rx\text{-}CM\text{-}ACp}$	AC peak common mode input voltage	--	--	150	mV
$RL_{Rx\text{-}DIFF}$	Differential return loss	15	--	--	dB
$RL_{Rx\text{-}CM}$	Common mode return loss	0	--	3.6	dB
$Z_{Rx\text{-}DIFF\text{-}DC}$	DC differential input impedance	80	100	120	W
$Z_{Rx\text{-}DC}$	DC input impedance	40	50	60	W
$Z_{Rx\text{-}HIGH\text{-}IMP\text{-}DC}$	Powered down DC input impedance	200	--	--	k
$V_{Rx\text{-}IDLE\text{-}DET\text{-}DIFF\text{-}p\text{-}p}$	Electrical idle detect threshold	65	--	175	mV
$T_{Rx\text{-}IDLE\text{-}DET\text{-}DIFF\text{-}ENTERTIME}$	Unexpected electrical idle enter detect threshold integration time	--	--	10	ms
$L_{Rx\text{-}SKEW}$	Total skew	--	--	20	ns

Table 18: PCI Express Rx Input Specifications—5 GT/s

Symbol	Parameter	Min	Typ	Max	Units
UI	Unit Interval (UI) UI does not account for SSC induced variations.	199.94	--	200.06	ps
$V_{Rx\text{-}DIFF\text{-}PP\text{-}CC}$	Differential Rx peak-to-peak voltage for common Refclk Rx architecture	0.120	--	1.2	V
$V_{Rx\text{-}DIFF\text{-}PP\text{-}DC}$	Differential Rx peak-to-peak voltage for data clocked Rx architecture	0.100	--	1.2	V
$T_{Rx\text{-}TJ\text{-}CC}$	Maximum Rx inherent total timing error for common Refclk Rx architecture	--	--	0.40	UI
$T_{Rx\text{-}TJ\text{-}DC}$	Maximum Rx inherent total timing error for data clocked Rx architecture	--	--	0.34	UI
$T_{Rx\text{-}DJ\text{-}DD\text{-}CC}$	Maximum Rx inherent deterministic timing error for common Refclk Rx architecture	--	--	0.30	UI
$T_{Rx\text{-}DJ\text{-}DD\text{-}DC}$	Maximum Rx inherent deterministic timing error for data clocked Rx architecture	--	--	0.24	UI

© Copyright 2019 Laird. All Rights Reserved
Americas: +1-800-492-2320
Europe: +44-1628-858-940
Hong Kong: +852 2923 0610

Symbol	Parameter	Min	Typ	Max	Units
$T_{Rx\text{-}MIN\text{-}PULSE}$	Minimum width pulse at Rx Measured to account for worst Tj at 10^{-12} BER.	0.6	--	--	UI
$V_{Rx\text{-}CM\text{-}ACp}$	AC peak common mode input voltage	--	--	150	mV
$RL_{Rx\text{-}DIFF}$	Differential return loss	15	--	--	dB
$RL_{Rx\text{-}CM}$	Common mode return loss	0	--	3.6	dB
$Z_{Rx\text{-}DIFF\text{-}DC}$	DC differential input impedance	80	100	120	W
$Z_{Rx\text{-}DC}$	DC input impedance	40	50	60	W
$Z_{Rx\text{-}HIGH\text{-}IMP\text{-}DC}$	Powered down DC input impedance	200	--	--	k
$V_{Rx\text{-}IDLE\text{-}DET\text{-}DIFF\text{-}p\text{-}p}$	Electrical idle detect threshold	65	--	175	mV
$T_{Rx\text{-}IDLE\text{-}DET\text{-}DIFF\text{-}ENTERTIME}$	Unexpected electrical idle enter detect threshold integration time	--	--	10	ms
$L_{Rx\text{-}SKEW}$	Total skew	--	--	20	ns

11 USB Specifications

11.1 USB LS Driver and Receiver Parameters

Notes: Over full range of values specified in the Recommended Operating Conditions unless otherwise specified.

The load is 100Ω differential for these parameters, unless other specified.

Table 15: USB LS Driver and Receiver Specifications

Symbol	Parameter	Min.	Typ.	Max.	Unit
BR	Baud rate	-	1.5	-	Mbps
BRPPM	Baud rate tolerance	-15000	-	15000	ppm
Driver Specifications					
VOH	Output signal ended high Defined with 1.425KΩ pull-up resistor to 3.6V	2.8	-	3.6	V
VOL	Output signal ended low Defined with 1.425KΩ pull-up resistor to ground	0.0	-	0.3	V
VCRS	Output signal crossover voltage	1.3		2.0	V
TLR	Data fall time Defined from 10% to 90% for raise time and 90% to 10% for fall time	75.0	-	300.0	ns
TLF	Data risel time Defined from 10% to 90% for raise time and 90% to 10% for fall time	75.0	-	300.0	ns
TLRFM	Rise and fall time matching	80.0	-	125.0	%
TUDJ1	Source jitter total: to next transition *Including frequency tolerance. Timing difference between the differential data signals.	-95	-	95	ns

© Copyright 2019 Laird. All Rights Reserved
Americas: +1-800-492-2320
Europe: +44-1628-858-940
Hong Kong: +852 2923 0610

Symbol	Parameter	Min.	Typ.	Max.	Unit
	*Defined at crossover point of differential signals				
TUDJ2	Source jitter total: for paired transitions *Including frequency tolerance. Timing difference between the differential data signals. *Defined at crossover point of differential signals	-150	-	150	ns
Receiver Specifications					
VIH	Input signal ended high	2.0	-	-	V
VIL	Input signal ended low	-	-	0.8	V
VDI	Differential input sensitivity	0.2	-	-	V

11.2 USB FS Driver and Receiver Parameters

Notes: Over full range of values specified in the Recommended Operating Conditions unless otherwise specified.

The load is 100Ω differential for these parameters, unless other specified.

Table 16: USB FS Driver and Receiver Specifications

Symbol	Parameter	Min.	Typ.	Max.	Unit
BR	Baud rate	-	12.0	-	Mbps
BRPPM	Baud rate tolerance	-2500	-	2500	ppm
Driver Specifications					
VOH	Output signal ended high Defined with 1.425KΩ pull-up resistor to 3.6V	2.8	-	3.6	V
VOL	Output signal ended low Defined with 1.425KΩ pull-up resistor to ground	0.0	-	0.3	V
VCRS	Output signal crossover voltage	1.3		2.0	V
TFR	Output raise time Defined from 10% to 90% for raise time and 90% to 10% for fall time	-4.0	-	20.0	ns
TFL	Output fall time Defined from 10% to 90% for raise time and 90% to 10% for fall time	-4.0	-	20.0	ns
TDJ1	Source jitter total: to next transition *Including frequency tolerance. Timing difference between the differential data signals. *Defined at crossover point of differential signals	-3.5	-	3.5	ns
TDJ2	Source jitter total: for paired transitions *Including frequency tolerance. Timing difference between the differential data signals. *Defined at crossover point of differential signals	-4.0	-	4.0	ns
TFDEOP	Source jitter for differential transition to SE0 transition. Defined at crossover point of differential signals	-2.0	-	5.0	ns

© Copyright 2019 Laird. All Rights Reserved
Americas: +1-800-492-2320
Europe: +44-1628-858-940
Hong Kong: +852 2923 0610

Symbol	Parameter	Min.	Typ.	Max.	Unit
Receiver Specifications					
VIH	Input signal ended high	2.0	-	-	V
VIL	Input signal ended low	-	-	0.8	V
VDI	Differential input sensitivity	0.2	-	-	V
TJR1	Receiver jitter: to next transition Defined at crossover point of differential data signals	-18.5	-	18.5	ns
TJR2	Receiver jitter: for paired transitions Defined at crossover point of differential data signals	-9.0	-	9.0	ns

11.3 USB HS Driver and Receiver Parameters

Notes: Over full range of values specified in the Recommended Operating Conditions unless otherwise specified.

The load is 100Ω differential for these parameters, unless other specified.

Table 17: USB HS Driver and Receiver Specifications

Symbol	Parameter	Min.	Typ.	Max.	Unit
BR	Baud rate	-	480	-	Mbps
BRPPM	Baud rate tolerance	-500	-	500	ppm
Driver Specifications					
VHSOH	Data signal high	360	-	440	mV
VHSOL	Data signal low	-10	-	10	mV
THSR	Data rise time Defined from 10% to 90% for raise time and 90% to 10% for fall time	500	-	-	ns
THSF	Data fall time Defined from 10% to 90% for raise time and 90% to 10% for fall time	-500	-	-	ns
Receiver Specifications					
VHSCM	Input signal ended low	-50	-	500	mV

© Copyright 2019 Laird. All Rights Reserved
Americas: +1-800-492-2320
Europe: +44-1628-858-940
Hong Kong: +852 2923 0610

12 PCM Interface Specifications

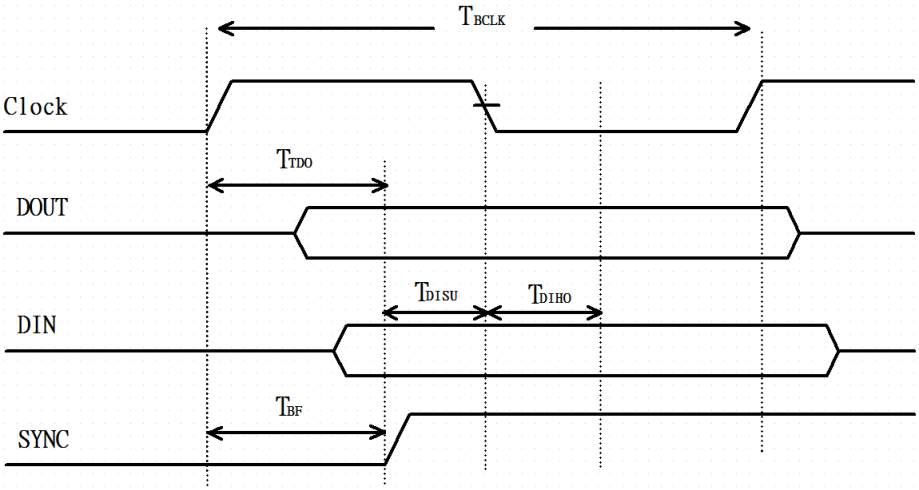

Figure 2: PCM Timing Specification – Master Mode

Table 18:PCM Timing Specification – Master Mode

Symbol	Parameter	Min.	Typ.	Max.	Unit
FBCLK	-	-	2/2.048	-	MHz
Duty CycleBCLK	-	0.4	0.5	0.6	-
TBCLK rise/fall	-	-	3	-	ns
TDO	-	-	-	15	ns
TDISU	-	20	-	-	ns
TDIHO	-	15	-	-	ns
TBF	-	-	-	15	ns

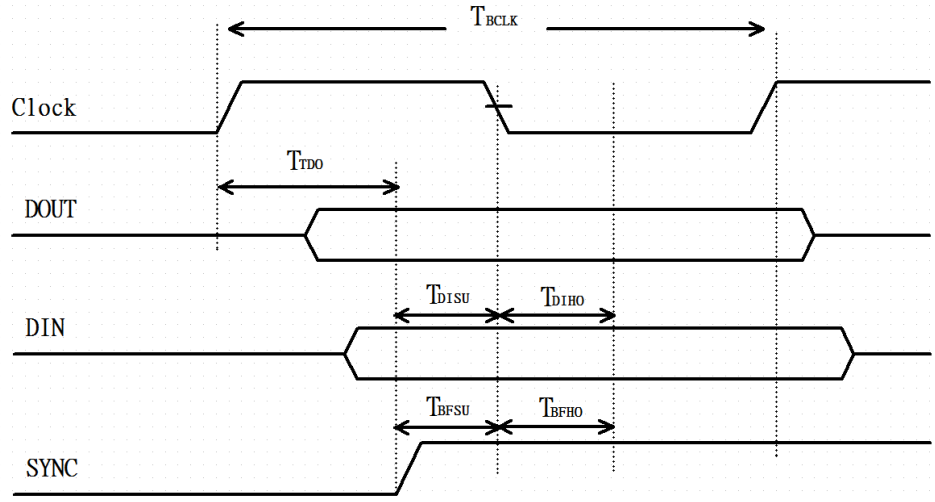

Figure 3: PCM Timing Specification – Slave Mode

© Copyright 2019 Laird. All Rights Reserved
Americas: +1-800-492-2320
Europe: +44-1628-858-940
Hong Kong: +852 2923 0610

Table 19: PCM Timing Specification – Slave Mode

Symbol	Parameter	Min.	Typ.	Max.	Unit
F_{BCLK}	-	-	2/2.048	-	MHz
Duty $Cycle_{BCLK}$	-	0.4	0.5	0.6	-
$T_{BCLK\ rise/fall}$	-	-	3	-	ns
T_{DO}	-	-	-	30	ns
T_{DISU}	-	15	-	-	ns
T_{DIHO}	-	10	-	-	ns
T_{BFSU}	-	15	-	-	ns
T_{BFHO}	-	10	-	-	ns

13 Pin Definitions

Table 20: Pin definitions

Pin #	Name	Type	Voltage Ref.	Description	If Not Used
1	GND	-	-	Ground	GND
2	3.3V	Power	-	3.3V module power supply	-
3	USB_D+	I/O	3.3V	USB Differential Data-Positive ***60-2230C-PU only***	N/C
4	3.3V	Power	-	3.3V module power supply	-
5	USB_D-	I/O	3.3V	USB Differential Data-Negative ***60-2230C-PU only***	N/C
6	LED1#	O,PU	3.3V	LED indicator for WLAN with 10mA drive capability	N/C
7	GND	-	-	Ground	GND
8	PCM_CLK	I/O	1.8V	PCM Clock Signal (Optimal) Optimal clock used for some codecs. Output if Master mode; Input if Slave mode.	N/C
9	SDIO CLK	N/C	1.8V	SDIO 4-bit Mode Clock Input	N/C
10	PCM_SYNC	I/O	1.8V	PCM Sync Pulse Signal Output if Master mode; Input if Slave mode.	N/C
11	SDIO CMD	N/C	1.8V	SDIO 4-bit Mode Command/Response	N/C
12	PCM_IN	I	1.8V	PCM Data	N/C
13	SDIO DATA0	N/C	1.8V	SDIO 4-bit Mode DATA line Bit[0]	N/C
14	PCM_OUT	O	1.8V	PCM Data	N/C
15	SDIO DATA1	N/C	1.8V	SDIO 4-bit Mode DATA line Bit[1]	N/C
16	LED2#	N/C	N/C	N/C	N/C
17	SDIO DATA2	N/C	1.8V	SDIO 4-bit Mode DATA line Bit[2]	N/C
18	GND	-	-	Ground	GND
19	SDIO DATA3	N/C	1.8V	SDIO 4-bit Mode DATA line Bit[3]	N/C
20	UART WAKE#	O	3.3V	Reserved for BT to wakeup Host	N/C
21	SDIO WAKE#	O	1.8V	Reserved for Wake-On-WLAN	N/C

© Copyright 2019 Laird. All Rights Reserved
Americas: +1-800-492-2320
Europe: +44-1628-858-940
Hong Kong: +852 2923 0610

Pin #	Name	Type	Voltage Ref.	Description	If Not Used
22	UART TXD	O	1.8V	UART Serial Data Output ***60-2230C-P only***	N/C
23	SDIO RESET#	N/C	N/C	N/C	N/C
32	UART RXD	I	1.8V	UART Serial Data Input ***60-2230C-P only***	N/C
33	GND	-	-	Ground	GND
34	UART RTS	O,WPU	1.8V	UART Request To Send (Active low) ***60-2230C-P only***	N/C
35	PERp0	I	1.8V	PCIe Receive Data-Positive	N/C
36	UART CTS	I, PU	1.8V	UART Clear To Send (Active low) ***60-2230C-P only***	N/C
37	PERn0	I	1.8V	PCIe Receive Data-Negative	N/C
38	VENDOR DEFINED38	N/C	N/C	N/C	N/C
39	GND	-	-	Ground	GND
40	VENDOR DEFINED40	N/C	N/C	N/C	N/C
41	PETp0	O	1.8V	PCIe Transmit Data-Positive	N/C
42	VENDOR DEFINED42	N/C	N/C	N/C	N/C
43	PETn0	O	1.8V	PCIe Transmit Data-Negative	N/C
44	COEX3	N/C	1.8V	General purpose I/O pin.	N/C
45	GND	-	-	Ground	GND
46	COEX2	O,PD	1.8V	Serial data to external LTE device/	N/C
47	REFCLKp0	I	1.8V	PCIe Differential Clock input-Positive	N/C
48	COEX1	I,PD	1.8V	Serial data from external LTE device/	N/C
49	REFCLKn0	I	1.8V	PCIe Differential Clock input-Negative	N/C
50	SUSCLK(32KHz)	I,PU	3.3V	Sleep Clock Input An external sleep clock of 32.768KHz with minimum +/- 250ppm is required for power saving mode	-
51	GND	-	-	Ground	GND
52	PERST0#	I,PD	3.3V	PCIe host indication to reset the device (input) (active low)	N/C
53	CLKREQ0#	I/O	3.3V	PCIe clock request (input/output) (active low)	GND
54	W_DISABLE2#	N/C	N/C	N/C	N/C
55	PEWAKE0#	I/O	3.3V	PCIe wake signal (input/output) (active low)	N/C
56	W_DISABLE1# (O)(0/3.3V)	I,PU	3.3V	This pin will power down the 60-SIPT, Active low. Note: DO NOT float this pin. Pull-up to 3.3V with 100K for normal operation.	PU
57	GND	-	-	Ground	GND

© Copyright 2019 Laird. All Rights Reserved
Americas: +1-800-492-2320
Europe: +44-1628-858-940
Hong Kong: +852 2923 0610

Pin #	Name	Type	Voltage Ref.	Description	If Not Used
58	I2C DATA (I/O)(0/3.3V)	N/C	N/C	N/C	N/C
59	RESERVED/PETp1	N/C	N/C	N/C	N/C
60	I2C CLK (O)(0/3.3V)	N/C	N/C	N/C	N/C
61	RESERVED/PETn1	N/C	N/C	N/C	N/C
62	ALERT# (I)(0/3.3V)	N/C	N/C	N/C	N/C
63	GND	-	-	Ground	GND
64	RESERVED	N/C	N/C	N/C	N/C
65	RESERVED/PERp1	N/C	N/C	N/C	N/C
66	UIM_SWP/PERST1#	N/C	N/C	N/C	N/C
67	RESERVED/PERn1	N/C	N/C	N/C	N/C
68	UIM_POWER_SNK/ CLKREQ1#	N/C	N/C	N/C	N/C
69	GND	-	-	Ground	GND
70	UIM_POWER_SRC/ GPIO1/PEWAKE1#	N/C	N/C	N/C	N/C
71	RESERVED/REFCLKp 1	N/C	N/C	N/C	N/C
72	3.3V	Power	-	3.3V module power supply	-
73	RESERVED/REFCLKn 1	N/C	N/C	N/C	N/C
74	3.3V	Power	-	3.3V module power supply	-
75	GND	-	-	Ground	GND

© Copyright 2019 Laird. All Rights Reserved
Americas: +1-800-492-2320
Europe: +44-1628-858-940
Hong Kong: +852 2923 0610

14 Mechanical Specifications

Module dimensions of 60-2230C-P/60-2230C-PU are 22 mm x 30 mm x 3.3 mm. Detail drawings are shown in Figure 4.

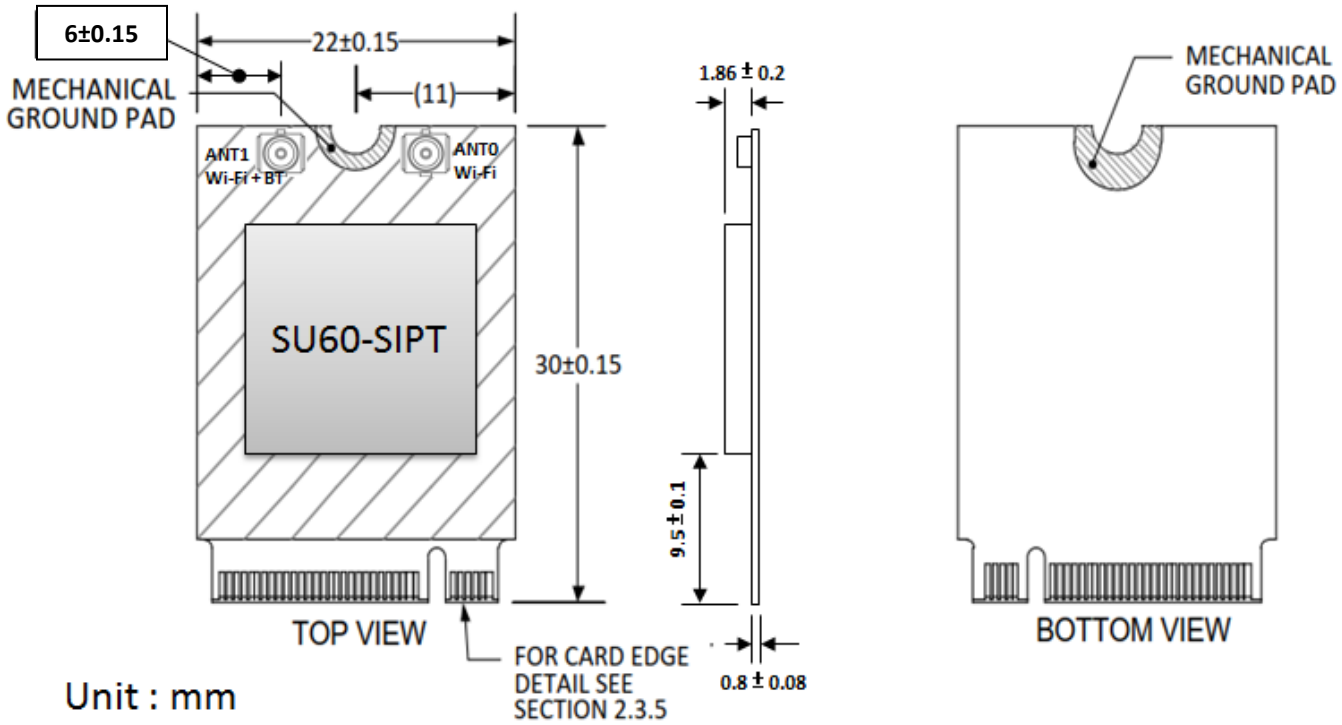

Figure 4: Module dimension of 60-2230C-P/60-2230C-PU

Note: The Wi-Fi MAC address is located on the product label.

The last digit of Wi-Fi MAC address will be assigned to either “0”, “4”, “8”, or “C”.

The BT MAC address will be the Wi-Fi MAC on the label plus 3.

© Copyright 2019 Laird. All Rights Reserved
Americas: +1-800-492-2320
Europe: +44-1628-858-940
Hong Kong: +852 2923 0610

15 Mounting

The 60-2230C-P/60-2230C-PU connects to the host via a standard PCI EXPRESS M2 connector. The Kyocera's (www.Kyocera-connector.com) 6411 series provide 1.8 mm, 2.3 mm and 3.2 mm connector heights.

Because the 60-2230C-P/60-2230C-PU is a single-side component module, we recommend the following part number (which has a 2.3 mm connector height): **24-6411-067-101-894E**

The stand-off mating to the recommend 2.3 mm connector from EMI STOP (www.EMISTOP.com) is part number **F50M16-041525P1D4M**. Detail layout and stencil opening are show in Figure 5.

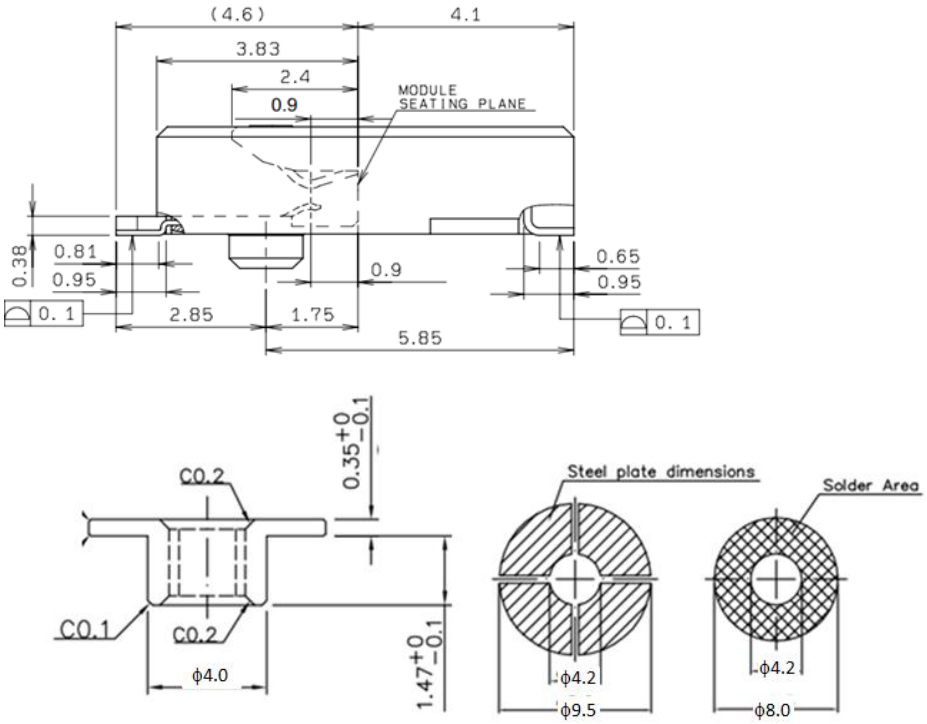

Figure 5: Mounting information of the 60-2230C-P/60-2230C-PU and recommended layout pattern for the stand-off

16 RF Layout Design Guidelines / Precautions

The following is a list of RF layout design guidelines and recommendation when installing a Laird radio into your device.

- Do not run antenna cables directly above or directly below the radio.
- Do not place any parts or run any high speed digital lines below the radio.
- If there are other radios or transmitters located on the device (such as a *Bluetooth* radio), place the devices as far apart from each other as possible. Also, make sure there is at least 25 dB isolation between the Bluetooth antenna and the Wi-Fi antenna.
- Ensure that there is the maximum allowable spacing separating the antenna connectors on the Laird radio from the antenna. In addition, do not place antennas directly above or directly below the radio.
- Laird recommends the use of a double-shielded cable for the connection between the radio and the antenna elements.
- Be sure to put the capacitor on the power pin as close as possible to reduce the radiation issue.
- Use proper electro-static-discharge (ESD) procedures when installing the Laird radio module.
- To get maximum throughput when operate at MIMO 2x2, two antennas with at least 25 dB isolation are recommended.

© Copyright 2019 Laird. All Rights Reserved
Americas: +1-800-492-2320
Europe: +44-1628-858-940
Hong Kong: +852 2923 0610

- To avoid negatively impacting Tx power and receiver sensitivity, do not cover the antennas with metallic objects or components.
- Opening/handing/removing must be done on an anti-ESD treated workbench. All workers must be also have undergone anti-ESD treatment.
- The devices should be mounted within one year of the date of delivery.

17 Regulatory

17.1 Regulatory IDs Summary

Model	US/FCC	Canada/IC	Korea
60-2230C	SQG-60SIPT	3147A-60SIPT	MSIP-CRM-LAI-60-SIPT

17.2 Certified Antennas

Model	Type	Connector	2400~2483.5MHz 5150~5250MHz 5250~5350MHz 5470~5725MHz 5725~5850MHz
Laird/NanoBlade-IP04	PCB Dipole	IPEX U.FL	2 dBi (2.4-2.5 GHz), 3.9 dBi (5.15-5.35 GHz), 4 dBi (5.6 GHz)
Laird/MAF95310 Mini NanoBlade Flex	PCB Dipole	IPEX U.FL	2.79 dBi @ 2.4 GHz, 3.38 dBi @ 5 GHz
Ethertronics/WLAN_1000146	Magnetic Dipole	IPEX U.FL	2.5 dBi (2.390-2.490), 3.5 dBi (4.900-5.100), 3.5 dBi (5.150-5.350), 3.5 dBi (5.70-5.900)
LSR/FlexPIFA 001-0016	PIFA	IPEX U.FL	2.5 dBi@2.4 GHz, 3 dBi@5 GHz
mFlexPIFA 001-0030	PIFA	IPEX U.FL	2 dBi (2.4-2.5 GHz)
LSR/001-0009	Dipole	IPEX U.FL	2 dBi@2.4 GHz, 2 dBi@5 GHz

© Copyright 2019 Laird. All Rights Reserved
Americas: +1-800-492-2320
Europe: +44-1628-858-940
Hong Kong: +852 2923 0610

18 FCC AND IC REGULATORY

Model	US/FCC	CANADA/IC
60-2230C	SQG-60SIPT	3147A-60SIPT

The 60-2230C has been designed to pass certification with the antenna listed below. The required antenna impedance is 50 ohms.

Table 21: FCC antenna information

Model	Type	Connector	Peak gain (dBi)				
			2400~2483.5 MHz	5150~5250 MHz	5250~5350 MHz	5470~5725 MHz	5725~5850 MHz
Laird/NanoBlade-IP04	PCB Dipole	IPEX U.FL	2.0 dBi	3.9 dBi	3.9 dBi	4.0 dBi	
Laird/MAF95310 Mini NanoBlade Flex	PCB Dipole	IPEX U.FL	2.79 dB	3.38 dBi			
Ethertronics/ WLAN_1000146	Magnetic Dipole	IPEX U.FL	2.5 dBi	3.5 dBi			
LSR/FlexPIFA 001-0016	PIFA	IPEX U.FL	2.5 dBi	3.0 dBi			
LSR/001-0009	Dipole	IPEX U.FL	2.0 dBi	2.0 dBi			

18.1 FCC

Federal Communication Commission Interference Statement

This equipment has been tested and found to comply with the limits for a Class B digital device, pursuant to Part 15 of the FCC Rules. These limits are designed to provide reasonable protection against harmful interference in a residential installation. This equipment generates, uses and can radiate radio frequency energy and, if not installed and used in accordance with the instructions, may cause harmful interference to radio communications. However, there is no guarantee that interference will not occur in a particular installation. If this equipment does cause harmful interference to radio or television reception, which can be determined by turning the equipment off and on, the user is encouraged to try to correct the interference by one of the following measures:

- Reorient or relocate the receiving antenna.
- Increase the separation between the equipment and receiver.
- Connect the equipment into an outlet on a circuit different from that to which the receiver is connected.
- Consult the dealer or an experienced radio/TV technician for help.

FCC Caution

Any changes or modifications not expressly approved by the party responsible for compliance could void the user's authority to operate this equipment.

This device complies with Part 15 of the FCC Rules. Operation is subject to the following two conditions: (1) This device may not cause harmful interference, and (2) this device must accept any interference received, including interference that may cause undesired operation.

© Copyright 2019 Laird. All Rights Reserved
Americas: +1-800-492-2320
Europe: +44-1628-858-940
Hong Kong: +852 2923 0610

Important Note

Radiation Exposure Statement

This equipment complies with FCC radiation exposure limits set forth for an uncontrolled environment. This equipment should be installed and operated with minimum distance 20cm between the radiator and your body.

This transmitter must not be co-located or operating in conjunction with any other antenna or transmitter.

Country Code selection feature to be disabled for products marketed to the US/Canada.

This device is intended only for OEM integrators under the following conditions:

1. The antenna must be installed such that 20 cm is maintained between the antenna and users, and
2. The transmitter module may not be co-located with any other transmitter or antenna,
3. For all products market in US, OEM has to limit the operation channels in CH1 to CH11 for 2.4G band by supplied firmware programming tool. OEM shall not supply any tool or info to the end-user regarding to Regulatory Domain change.

As long as the three conditions above are met, further ***transmitter*** testing will not be required. However, the OEM integrator is still responsible for testing their end-product for any additional compliance requirements required with this module installed.

Important Note

In the event that these conditions ***cannot be met*** (for example certain laptop configurations or co-location with another transmitter), then the FCC authorization is no longer considered valid and the FCC ID ***cannot*** be used on the final product. In these circumstances, the OEM integrator will be responsible for re-evaluating the end product (including the transmitter) and obtaining a separate FCC authorization.

End Product Labeling

This transmitter module is authorized only for use in device where the antenna may be installed such that 20 cm may be maintained between the antenna and users. The final end product must be labeled in a visible area with the following: ***Contains FCC ID: SQG-60SIPT***.

Manual Information to the End User

The OEM integrator has to be aware not to provide information to the end user regarding how to install or remove this RF module in the user's manual of the end product which integrates this module.

The end user manual shall include all required regulatory information/warning as show in this manual.

18.2 Industry Canada

Industry Canada Statement

This device complies with Industry Canada's license-exempt RSSs. Operation is subject to the following two conditions:

- This device may not cause interference; and
- This device must accept any interference, including interference that may cause undesired operation of the device.

Le présent appareil est conforme aux CNR d'Industrie Canada applicables aux appareils radio exempts de licence. L'exploitation est autorisée aux deux conditions suivantes:

- l'appareil ne doit pas produire de brouillage;
- l'utilisateur de l'appareil doit accepter tout brouillage radioélectrique subi, même si le brouillage est susceptible d'en compromettre le fonctionnement.

© Copyright 2019 Laird. All Rights Reserved
Americas: +1-800-492-2320
Europe: +44-1628-858-940
Hong Kong: +852 2923 0610

This radio transmitter (IC: 3147A-60SIPT) has been approved by Industry Canada *to operate with the antenna types listed below with the maximum permissible gain indicated. Antenna types not included in this list, having a gain greater than the maximum gain indicated for that type, are strictly prohibited for use with this device.*

Le présent émetteur radio (IC: 3147A-60SIPT) a été approuvé par Industrie Canada pour fonctionner avec les types d'antenne énumérés ci-dessous et ayant un gain admissible maximal. Les types d'antenne non inclus dans cette liste, et dont le gain est supérieur au gain maximal indiqué, sont strictement interdits pour l'exploitation de l'émetteur.

Antenna Information

Table 22: Antenna information

Model	Type	Connector	Peak gain (dBi)				
			2400~2483.5 MHz	5150~5250 MHz	5250~5350 MHz	5470~5725 MHz	5725~5850 MHz
Laird/NanoBlade-IP04	PCB Dipole	IPEX U.FL	2.0 dBi	3.9 dBi	3.9 dBi	4.0 dBi	
Laird/MAF95310 Mini NanoBlade Flex	PCB Dipole	IPEX U.FL	2.79 dB	3.38 dBi			
Ethertronics/ WLAN_1000146	Magnetic Dipole	IPEX U.FL	2.5 dBi	3.5 dBi			
LSR/ FlexPIFA 001-0016	PIFA	IPEX U.FL	2.5 dBi	3.0 dBi			
LSR/001-0009	Dipole	IPEX U.FL	2.0 dBi	2.0 dBi			

Caution:

(i) The device for operation in the band 5150–5250 MHz is only for indoor use to reduce the potential for harmful interference to co-channel mobile satellite systems;

(ii) For devices with detachable antenna(s), the maximum antenna gain permitted for devices in the bands 5250-5350 MHz and 5470-5725 MHz shall be such that the equipment still complies with EIRP limit;

(iii) For devices with detachable antenna(s), the maximum antenna gain permitted for devices in the band 5725-5850 MHz shall be such that the equipment still complies with the EIRP limits specified for point-to-point and non-point-to-point operation as appropriate; and

Operations in the 5.25-5.35GHz band are restricted to indoor usage only.

Avertissement:

(i) les dispositifs fonctionnant dans la bande de 5150 à 5250MHz sont réservés uniquement pour une utilisation à l'intérieur afin de réduire les risques de brouillage préjudiciable aux systèmes de satellites mobiles utilisant les mêmes canaux;

(ii) pour les dispositifs munis d'antennes amovibles, le gain maximal d'antenne permis pour les dispositifs utilisant les bandes de 5250 à 5350MHz et de 5470 à 5725 MHz doit être conforme à la limite de la p.i.r.e;

(iii) pour les dispositifs munis d'antennes amovibles, le gain maximal d'antenne permis (pour les dispositifs utilisant la bande de 5725 à 5850 MHz) doit être conforme à la limite de la p.i.r.e. spécifiée pour l'exploitation point à point et l'exploitation non point à point, selon le cas;

Les opérations dans la bande de 5.25-5.35GHz sont limités à un usage intérieur seulement.

© Copyright 2019 Laird. All Rights Reserved
Americas: +1-800-492-2320
Europe: +44-1628-858-940
Hong Kong: +852 2923 0610

Radiation Exposure Statement

This equipment complies with Canada radiation exposure limits set forth for an uncontrolled environment. This equipment should be installed and operated with minimum distance 20cm between the radiator and your body.

Déclaration d'exposition aux radiations

Cet équipement est conforme Canada limites d'exposition aux radiations dans un environnement non contrôlé. Cet équipement doit être installé et utilisé à distance minimum de 20cm entre le radiateur et votre corps.

This device is intended only for OEM integrators under the following condition:

- The transmitter module may not be co-located with any other transmitter or antenna.

As long as the condition above is met, further transmitter test will not be required. However, the OEM integrator is still responsible for testing their end-product for any additional compliance requirements required with this module installed.

Cet appareil est conçu uniquement pour les intégrateurs OEM dans les conditions suivantes:

- Le module émetteur peut ne pas être coïmplanté avec un autre émetteur ou antenne.

Tant que les 1 condition ci-dessus sont remplies, des essais supplémentaires sur l'émetteur ne seront pas nécessaires. Toutefois, l'intégrateur OEM est toujours responsable des essais sur son produit final pour toutes exigences de conformité supplémentaires requis pour ce module installé.

Important Note

In the event that these conditions cannot be met (for example certain laptop configurations or co-location with another transmitter), then the Canada authorization is no longer considered valid and the IC ID cannot be used on the final product. In these circumstances, the OEM integrator will be responsible for re-evaluating the end product (including the transmitter) and obtaining a separate Canada authorization.

Note Important

Dans le cas où ces conditions ne peuvent être satisfaites (par exemple pour certaines configurations d'ordinateur portable ou de certaines co-localisation avec un autre émetteur), l'autorisation du Canada n'est plus considéré comme valide et l'ID IC ne peut pas être utilisé sur le produit final. Dans ces circonstances, l'intégrateur OEM sera chargé de réévaluer le produit final (y compris l'émetteur) et l'obtention d'une autorisation distincte au Canada.

End Product Labeling

The final end product must be labeled in a visible area with the following: ***Contains IC: 3147A-60SIPT***.

laque signalétique du produit final

Le produit final doit être étiqueté dans un endroit visible avec l'inscription suivante: ***Contient des IC: 3147A-60SIPT***.

Manual Information to the End User

The OEM integrator has to be aware not to provide information to the end user regarding how to install or remove this RF module in the user's manual of the end product which integrates this module.

The end user manual shall include all required regulatory information/warning as show in this manual.

Manuel d'information à l'utilisateur final

L'intégrateur OEM doit être conscient de ne pas fournir des informations à l'utilisateur final quant à la façon d'installer ou de supprimer ce module RF dans le manuel de l'utilisateur du produit final qui intègre ce module.

© Copyright 2019 Laird. All Rights Reserved
Americas: +1-800-492-2320
Europe: +44-1628-858-940
Hong Kong: +852 2923 0610

Le manuel de l'utilisateur final doit inclure toutes les informations réglementaires requises et avertissements comme indiqué dans ce manuel.

19 European Union Regulatory

The 60-2230C has been tested for compliance with relevant standards for the EU market. 60-2230C module was tested with antennas listed below.

Table 23: EU antenna information

Model	Type	Connector	2400~2483.5MHz 5150~5250MHz 5250~5350MHz 5470~5725MHz 5725~5850MHz
Laird MAF94051	Dipole	RP-SMA	2.1 dBi (2.4-2.5 GHz), 2.4 dBi (4.9 GHz) 2.6 dBi (5.25 GHz), 3.4 dBi (5.875 GHz)
Laird/NanoBlade-IP04	PCB Dipole	IPEX MHF	2 dBi (2.4-2.5 GHz), 3.9 dBi (5.15-5.35 GHz), 4 dBi (5.6 GHz)
Laird/MAF95310 Mini Nano Blade Flex	PCB Dipole	IPEX MHF	2.79 dBi (2.4 GHz), 3.38 dBi (5 GHz)
Laird/NanoBlue-IP04	PCB Dipole	IPEX MHF	2 dBi (2.4 GHz only)
Ethertronics/WLAN_1000146	Isolated Magnetic Dipole	IPEX MHF	2.5 dBi (2.390-2.490 GHz), 3.5 dBi (4.900-5.100, 5.150-5.350, 5.70-5.900 GHz)

The OEM should consult with a qualified test house before entering their device into an EU member country to make sure all regulatory requirements have been met for their complete device.

Reference the Declaration of Conformities listed below for a full list of the standards that the modules were tested to. Test reports are available upon request.

19.1 EU Declarations of Conformity

This device complies with the essential requirements of the Radio Equipment directive: 2014/53/EU. The following test methods have been applied to prove presumption of conformity with the essential requirements of the Radio Equipment directive **2014/53/EU**:

Manufacturer:	Laird
Products:	60-2230C
EU Directives:	2014/53/EU – Radio Equipment Directive (RED)

Reference standards used for presumption of conformity:

Article Number	Requirement	Reference standard(s)
3.1a	Low voltage equipment safety	EN 60950-1:2006+A11+A1:2010+A12:2011+A2 2013
	RF Exposure	EN 62311:2008 EN 50385:2002
3.1b	Protection requirements with respect to electromagnetic compatibility	EN 301 489-1 v2.2.0 (Draft) EN 301 489-17 v3.2.0 (Draft)
3.2	Means of the efficient use of the radio frequency spectrum	EN 300 328 v2.1.1 (2015-02) EN 301 893 v2.1.0 (Final Draft)

© Copyright 2019 Laird. All Rights Reserved
Americas: +1-800-492-2320
Europe: +44-1628-858-940
Hong Kong: +852 2923 0610

Declaration:

We, Laird, declare under our sole responsibility that the essential radio test suites have been carried out and that the above product to which this declaration relates is in conformity with all the applicable essential requirements of Article 3 of the EU Radio Equipment directive 2014/53/EU, when used for its intended purpose.

Place of Issue:	Laird W66N220 Commerce Court, Cedarburg, WI 53012 USA tel: +1-262-375-4400 fax: +1-262-364-2649
Date of Issue:	May 2017
Name of Authorized Person:	Thomas T Smith, Director of EMC Compliance
Signature of Authorized Person:	Thomas T. Smith

Maximum Output Power for Each Frequency		Software Version for Testing
TBD	20.5 dBm, 5.15-5.25 GHz 20.5 dBm, 5.25-5.35 GHz 20.5 dBm, 5.47-5.725 GHz	SW version: P95

The minimum distance between the user and/or any bystander and the radiating structure of the transmitter is 20 cm.

5150 ~ 5350 MHz is limited to indoor used in the following countries:

BE	DK	IE	FR	CY	LU	NL	PT	SK	UK	NO
BG	DE	EL	HR	LV	HU	AT	RO	FI	LI	TR
CZ	EE	ES	IT	LT	MT	PL	SI	SE	IS	CH

20 Ordering Information

Part Number	Description
60-2230C	2X2 802.11 a/b/g/n with BT4.2 dual mode module.

20.1 General Comments

This is a preliminary datasheet. Please check with Laird for the latest information before commencing a design. If in doubt, ask.

Česky [Czech]	*[Jméno výrobce]* tímto prohlašuje, že tento *[typ zařízení]* je ve shodě se základními požadavky a dalšími příslušnými ustanoveními směrnice 2014/53/EU.
Dansk [Danish]	Undertegnede *[fabrikantens navn]* erklærer herved, at følgende udstyr *[udstyrets typebetegnelse]* overholder de væsentlige krav og øvrige relevante krav i direktiv 2014/53/EU.
Deutsch [German]	Hiermit erklärt *[Name des Herstellers]*, dass sich das Gerät *[Gerätetyp]* in Übereinstimmung mit den grundlegenden Anforderungen und den übrigen einschlägigen Bestimmungen der Richtlinie 2014/53/EU befindet.

© Copyright 2019 Laird. All Rights Reserved
Americas: +1-800-492-2320
Europe: +44-1628-858-940
Hong Kong: +852 2923 0610

et **Eesti [Estonian]**	Käesolevaga kinnitab *[tootja nimi = name of manufacturer]* seadme *[seadme tüüp = type of equipment]* vastavust direktiivi 2014/53/EU põhinõuetele ja nimetatud direktiivist tulenevatele teistele asjakohastele sätetele.
en **English**	Hereby, *[name of manufacturer]*, declares that this *[type of equipment]* is in compliance with the essential requirements and other relevant provisions of Directive 2014/53/EU.
es **Español [Spanish]**	Por medio de la presente *[nombre del fabricante]* declara que el *[clase de equipo]* cumple con los requisitos esenciales y cualesquiera otras disposiciones aplicables o exigibles de la Directiva 2014/53/EU.
el **Ελληνική [Greek]**	ΜΕ ΤΗΝ ΠΑΡΟΥΣΑ *[name of manufacturer]* ΔΗΛΩΝΕΙ ΟΤΙ *[type of equipment]* ΣΥΜΜΟΡΦΩΝΕΤΑΙ ΠΡΟΣ ΤΙΣ ΟΥΣΙΩΔΕΙΣ ΑΠΑΙΤΗΣΕΙΣ ΚΑΙ ΤΙΣ ΛΟΙΠΕΣ ΣΧΕΤΙΚΕΣ ΔΙΑΤΑΞΕΙΣ ΤΗΣ ΟΔΗΓΙΑΣ 2014/53/EU.
fr **Français [French]**	Par la présente *[nom du fabricant]* déclare que l'appareil *[type d'appareil]* est conforme aux exigences essentielles et aux autres dispositions pertinentes de la directive 2014/53/EU.
it **Italiano [Italian]**	Con la presente *[nome del costruttore]* dichiara che questo *[tipo di apparecchio]* è conforme ai requisiti essenziali ed alle altre disposizioni pertinenti stabilite dalla direttiva 2014/53/EU.
Latviski [Latvian]	Aršo*[name of manufacturer /izgatavotājanosaukums]* deklarē, ka*[type of equipment / iekārtas tips]*atbilstDirektīvas 2014/53/EU būtiskajāmprasībām un citiemar to saistītajiemnoteikumiem.
Lietuvių [Lithuanian]	Šiuo *[manufacturer name]* deklaruoja, kad šis *[equipment type]* atitinka esminius reikalavimus ir kitas 2014/53/EU Direktyvos nuostatas.
nl **Nederlands [Dutch]**	Hierbij verklaart *[naam van de fabrikant]* dat het toestel *[type van toestel]* in overeenstemming is met de essentiële eisen en de andere relevante bepalingen van richtlijn 2014/53/EU.
mt **Malti [Maltese]**	Hawnhekk, *[isem tal-manifattur]*, jiddikjara li dan *[il-mudel tal-prodott]* jikkonforma mal-ħtiġijiet essenzjali u ma provvedimenti oħrajn relevanti li hemm fid-Dirrettiva 2014/53/EU.
hu **Magyar [Hungarian]**	Alulírott, *[gyártó neve]* nyilatkozom, hogy a *[... típus]*megfelel a vonatkozó alapvető követelményeknek és az 2014/53/EU irányelv egyéb előírásainak.
pl **Polski [Polish]**	Niniejszym *[nazwa producenta]* oświadcza, że *[nazwa wyrobu]* jest zgodny z zasadniczymi wymogami oraz pozostałymi stosownymi postanowieniami Dyrektywy 2014/53/EU.
pt **Português [Portuguese]**	*[Nome do fabricante]* declara que este *[tipo de equipamento]* está conforme com os requisitos essenciais e outras disposições da Directiva 2014/53/EU.
sl **Slovensko [Slovenian]**	*[Ime proizvajalca]* izjavlja, da je ta *[tip opreme]* v skladu z bistvenimi zahtevami in ostalimi relevantnimi določili direktive 2014/53/EU.
Slovensky [Slovak]	*[Menovýrobcu]*týmtovyhlasuje, že*[typzariadenia]*spĺňazákladnépožiadavky a všetkypríslušnéustanoveniaSmernice 2014/53/EU.
fi **Suomi [Finnish]**	*[Valmistaja = manufacturer]* vakuuttaa täten että *[type of equipment = laitteen tyyppimerkintä]* tyyppinen laite on direktiivin 2014/53/EU oleellisten vaatimusten ja sitä koskevien direktiivin muiden ehtojen mukainen.
sv **Svenska [Swedish]**	Härmed intygar *[företag]* att denna *[utrustningstyp]* står I överensstämmelse med de väsentliga egenskapskrav och övriga relevanta bestämmelser som framgår av direktiv 2014/53/EU.

© Copyright 2018 Laird. All Rights Reserved. Any information furnished by Laird and its agents is believed to be accurate and reliable. All specifications are subject to change without notice. Responsibility for the use and application of Laird materials or products rests with the end user since Laird and its agents cannot be aware of all potential uses. Laird makes no warranties as to non-infringement nor as to the fitness, merchantability, or sustainability of any Laird materials or products for any specific or general uses. Laird, Laird Technologies, Inc., or any of its affiliates or agents shall not be liable for incidental or consequential damages of any kind. All Laird products are sold pursuant to the Laird Terms and Conditions of Sale in effect from time to time, a copy of which will be furnished upon request. When used as a tradename herein, *Laird* means Laird PLC or one or more subsidiaries of Laird PLC. Laird™, Laird Technologies™, corresponding logos, and other marks are trademarks or registered trademarks of Laird. Other marks may be the property of third parties. Nothing herein provides a license under any Laird or any third party intellectual property right.