Product Change Notification (PCN)

PCN #: 8F-2026 Rev 1.1 *Date: October 12th, 2026*

Revision 1.1 summary: Issued October 12th, 2026. This revision adds guidance for customers and distributors holding units built to the previous revision (see Recommended Customer Action). The technical change described in this notice is unchanged.

1 Products Affected

Ezurio Part Number	Description
N93_SMARC_SOM_1r16e	Nitrogen93 SMARC SOM: i.MX 93 Dual / 1GB / 16GB eMMC / 0 to +70°C / Without Wireless
N93_SMARC_SOM_2r16e	Nitrogen93 SMARC SOM: i.MX 93 Dual / 2GB / 16GB eMMC / 0 to +70°C / Without Wireless
N93_SMARC_SOM_1r16e_i	Nitrogen93 SMARC SOM: i.MX 93 Dual / 1GB / 16GB eMMC / -40 to +85°C / Without Wireless
N93_SMARC_SOM_2r16e_i	Nitrogen93 SMARC SOM: i.MX 93 Dual / 2GB / 16GB eMMC / -40 to +85°C / Without Wireless
N93_SMARC_SOM_1r16e_NX611_1M	Nitrogen93 SMARC SOM: i.MX 93 Dual / 1GB / 16GB eMMC / NX611 / 0 to +70°C
N93_SMARC_SOM_1r16e_NX611_1M_i	Nitrogen93 SMARC SOM: i.MX 93 Dual / 1GB / 16GB eMMC / NX611 / -40 to +85°C
N93_SMARC_SOM_2r16e_NX611_1M	Nitrogen93 SMARC SOM: i.MX 93 Dual / 2GB / 16GB eMMC / NX611 / 0 to +70°C
N93_SMARC_SOM_2r16e_NX611_1M_i	Nitrogen93 SMARC SOM: i.MX 93 Dual / 2GB / 16GB eMMC / NX611 / -40 to +85°C
N93_SMARC_SOM_1r16e_IF573_3M	Nitrogen93 SMARC SOM: i.MX 93 Dual / 1GB / 16GB eMMC / IF573 / 0 to +70°C
N93_SMARC_SOM_1r16e_IF573_3M_i	Nitrogen93 SMARC SOM: i.MX 93 Dual / 1GB / 16GB eMMC / IF573 / -40 to +85°C
N93_SMARC_SOM_2r16e_IF573_3M	Nitrogen93 SMARC SOM: i.MX 93 Dual / 2GB / 16GB eMMC / IF573 / 0 to +70°C
N93_SMARC_SOM_2r16e_IF573_3M_i	Nitrogen93 SMARC SOM: i.MX 93 Dual / 2GB / 16GB eMMC / IF573 / -40 to +85°C
EZSMI-935-0216-00158-2-K2	Nitrogen93 SMARC Evaluation Kit: 7 in Display / SMARC Carrier Board / i.MX 93 / 2GB / 16GB eMMC / NX611 1MHF / Accessories

Note: The low-temperature start-up behaviour addressed by this notice relates to the industrial temperature variants (-40 to +85°C, part numbers ending "_i"). The 0 to +70°C variants carry the same BOM update to keep the product family aligned and are not expected to be affected.

2 Description of Changes

1) Replace the existing BAT54C with a lower-forward-voltage Schottky diode. SDM40E20LC-7 provides lower forward-voltage drop compared with the existing BAT54C, improving the voltage available on the downstream NVCC_BBSM_1V8 rail.

2) This PCN also serves as notification that the LPDDR4 1GB Memory D0811PM1WDGTK-U and NT6AN512M16AV-J1I are approved for interchangeable use in production. Because both devices share the same interface standard, package footprint, electrical characteristics, and memory density, they are form-fit-function compatible for the intended application

© Copyright 2026 Ezurio
All Rights Reserved

Ezurio Part Number	Current REV	TEMP Change/Micron Memory REV	TEMP Change/Nanya Memory REV
N93_SMARC_SOM_1r16e	30B-R	3-3	3-4
N93_SMARC_SOM_2r16e	30B-R	3-2	N/A
N93_SMARC_SOM_1r16e_i	30B-R	3-2	3-3
N93_SMARC_SOM_2r16e_i	30B-R	3-2	N/A
N93_SMARC_SOM_1r16e_NX611_1M	N/A	3-2	3-3
N93_SMARC_SOM_1r16e_NX611_1M_i	N/A	3-2	3-3
N93_SMARC_SOM_2r16e_NX611_1M	30B-R	3-2	N/A
N93_SMARC_SOM_2r16e_NX611_1M_i	30B-R	3-2	N/A
N93_SMARC_SOM_1r16e_IF573_3M	N/A	3-2	3-3
N93_SMARC_SOM_1r16e_IF573_3M_i	N/A	3-2	3-3
N93_SMARC_SOM_2r16e_IF573_3M	N/A	N/A	N/A
N93_SMARC_SOM_2r16e_IF573_3M_i	30B-R	3-2	N/A
EZSMI-935-0216-00158-2-K2	30B-R	3-2	N/A

3 Reason for Change

1) The board shows reset/startup reliability issues below -10°C. Investigation indicates that the voltage drop across the existing BAT54C diode reduces the effective NVCC_BBSM_1V8 voltage. This can reduce the high-level margin for PMIC_RST_B.

2) Allowing both Memory devices to be used interchangeably ensures manufacturing continuity and reduced supply chain risk, while maintaining the same functional and electrical performance

4 Anticipated Impact of the Change

There is no change to form, fit or function. Units built to the previous revision (BAT54C fitted, R41 unpopulated) and operated in industrial temperature applications may not start reliably at low temperatures. Units built to the new revision are not affected. Please see Recommended Customer Action below.

5 Recommended Customer Action

Ezurio is offering the following support for units built to the previous revision.

Customers: Customers operating industrial temperature variants at temperatures below -10°C are invited to request replacement of previous revision units from the sourcing party they purchased from. Ezurio will replace affected units at no charge through an RMA. To arrange this, please contact your Ezurio sales representative, your distributor, or Ezurio Customer Services (csglobal@ezurio.com) Customers who do not operate these units at low temperatures need not take any action.

© Copyright 2026 Ezurio
All Rights Reserved

Distributors: Distributors holding previous revision stock of the industrial temperature variants are requested to return it to Ezurio under an RMA as a precautionary measure. Ezurio will rework the units to the new revision and return them. Distributors are also encouraged to share this notice with customers who have purchased these variants.

6 Method of Identifying the Changed Product

Industrial temperature variants are identified by the "_i" suffix on the Ezurio part number. The state of designator R41, shown below, identifies the revision.

6.1 Designator R41

- Previous REV is unpopulated

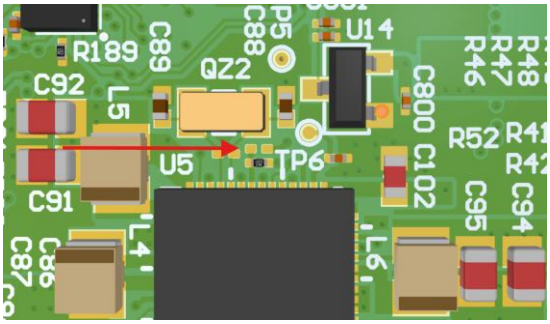

- New REV is populated

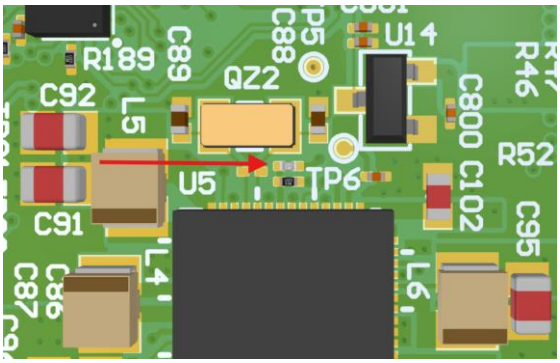

6.2 Memory

- D0811PM1WDGTK-U (current component)



- NT6AN512M16AV-J1I (new component)

© Copyright 2026 Ezurio
All Rights Reserved



7 Factory Effectivity Date

These changes have been implemented immediately into production. Open sales orders have been updated to the new revision.

NOTE – As the memory is interchangeable and has no impact on form / fit or function, production orders will be supplied at either stated REV depending on memory availability in the current global market constraints.

8 Contact Information

Headquarters	Ezurio AES Building, 388 S Main Street, Suite 330 Akron, OH 44311 USA
Website	www.ezurio.com
Sales / Support Contact	https://www.ezurio.com/contact

Product Change Notices (PCNs) will be distributed at the discretion of Ezurio. Occasionally, Ezurio may adjust product revision levels for internal tracking purposes only, and customers may not receive formal notifications associated with those revision changes.

© Copyright 2026 Ezurio
All Rights Reserved