FCC DoC TEST REPORT

REPORT NO.: FD950331L08A
MODEL NO.: SDC-MCF10G
RECEIVED: Mar. 18, 2008
TESTED: Mar. 31 ~ Apr. 10, 2008
ISSUED: Apr. 14, 2008

APPLICANT : Summit Data Communications, Inc.

ADDRESS: 526 South Main Street Suite 805 Akron, OH 44311
United States

ISSUED BY : Advance Data Technology Corporation

LAB ADDRESS : No. 47, 14th Ling, Chia Pau Tsuen, Lin Kou Hsiang 244, Taipei Hsien, Taiwan, R.O.C.

TEST LOCATION : No. 19, Hwa Ya 2nd Rd., Wen Hwa Tsuen, Kwei Shan Hsiang, Taoyuan Hsien 333, Taiwan, R.O.C.

This test report consists of 24 pages in total. It may be duplicated completely for legal use with the approval of the applicant. It should not be reproduced except in full, without the written approval of our laboratory. The client should not use it to claim product endorsement by TAF, A2LA or any government agencies. The test results in the report only apply to the tested sample.

TESTING CERT #2177-01

Table of Contents

1 CERTIFICATION....3
2 SUMMARY OF TEST RESULTS....4
2.1 MEASUREMENT UNCERTAINTY....4
3 GENERAL INFORMATION....5
3.1 GENERAL DESCRIPTION OF EUT....5
3.2 DESCRIPTION OF TEST MODES....6
3.2.1 CONFIGURATION OF SYSTEM UNDER TEST....6
3.2.2 TEST MODE APPLICABILITY AND TESTED CHANNEL DETAIL....7
3.3 GENERAL DESCRIPTION OF APPLIED STANDARDS....8
3.4 DESCRIPTION OF SUPPORT UNITS....8
4 TEST TYPES AND RESULTS....9
4.1 RADIATED EMISSION MEASUREMENT....9
4.1.1 LIMITS OF RADIATED EMISSION MEASUREMENT....9
4.1.2 TEST INSTRUMENTS....10
4.1.3 TEST PROCEDURES....11
4.1.4 DEVIATION FROM TEST STANDARD....11
4.1.5 TEST SETUP....12
4.1.6 EUT OPERATING CONDITIONS....12
4.1.7 TEST RESULTS....13
4.2 CONDUCTED EMISSION MEASUREMENT....17
4.2.1 LIMITS OF CONDUCTED EMISSION MEASUREMENT....17
4.2.2 TEST INSTRUMENTS....17
4.2.3 TEST PROCEDURES....18
4.2.4 DEVIATION FROM TEST STANDARD....18
4.2.5 TEST SETUP....19
4.2.6 EUT OPERATING CONDITIONS....19
4.2.7 TEST RESULTS....20
5 PHOTOGRAPHS OF THE TEST CONFIGURATION....22
6 INFORMATION ON THE TESTING LABORATORIES....23
7 APPENDIX A – MODIFICATIONS RECORDERS FOR ENGINEERING CHANGES TO THE EUT BY THE LAB....24

1 CERTIFICATION

PRODUCT:	802.11g Mini-Compact Flash Module with Dual U.FL Connectors
MODEL NO.:	SDC-MCF10G
BRAND:	Summit
APPLICANT:	Summit Data Communications, Inc.
TESTED:	Mar. 31 ~ Apr. 10, 2008
TEST SAMPLE:	ENGINEERING SAMPLE
STANDARDS:	**FCC Part 15, Subpart B, Class B** ANSI C63.4-2003

The above equipment (model: SDC-MCF10G) has been tested by **Advance Data Technology Corporation**, and found compliance with the requirement of the above standards. The test record, data evaluation & Equipment Under Test (EUT) configurations represented herein are true and accurate accounts of the measurements of the sample's EMC characteristics under the conditions specified in this report.

PREPARED BY : Wendy Liao , **DATE:** Apr. 14, 2008
Wendy Liao / Senior Specialist

TECHNICAL ACCEPTANCE Responsible for RF : Long Chen , **DATE:** Apr. 14, 2008
Long Chen / Senior Engineer

APPROVED BY : Gary Chang , **DATE:** Apr. 14, 2008
Gary Chang / Assistant Manager

2 SUMMARY OF TEST RESULTS

The EUT has been tested according to the following specifications:

Standard Section	Test Type	Result	Remarks
FCC Part 15, Subpart B, Class B	Conducted Emission	PASS	Meet the requirement of limit. Minimum passing margin is –15.28dB at 3.436MHz
	Radiated Emissions	PASS	Meet the requirement of limit Minimum passing margin is –1.47dB at 191.12MHz

2.1 MEASUREMENT UNCERTAINTY

Where relevant, the following measurement uncertainty levels have been estimated for tests performed on the EUT as specified in CISPR 16-4-2:

MEASUREMENT	FREQUENCY	UNCERTAINTY
Conducted emissions	9kHz~30MHz	2.44 dB
Radiated emissions	30MHz ~ 200MHz	3.34 dB
	200MHz ~1000MHz	3.35 dB
	1GHz ~ 18GHz	2.26 dB
	18GHz ~ 40GHz	1.94 dB

This uncertainty represents an expanded uncertainty expressed at approximately the 95% confidence level using a coverage factor of k=2.

3 GENERAL INFORMATION

3.1 GENERAL DESCRIPTION OF EUT

PRODUCT	802.11g Mini-Compact Flash Module with Dual U.FL Connectors
MODEL NO.	SDC-MCF10G
POWER SUPPLY	3.3Vdc from host equipment
MODULATION TYPE	CCK, DQPSK, DBPSK for DSSS 64QAM, 16QAM, QPSK, BPSK for OFDM
MODULATION TECHNOLOGY	DSSS, OFDM
TRANSFER RATE	802.11b: 11/5.5/2/1Mbps 802.11g: 54/48/36/24/18/12/9/6Mbps
FREQUENCY RANGE	2412MHz ~ 2462MHz
NUMBER OF CHANNEL	11
MAXIMUM OUTPUT POWER	77.446mW
ANTENNA TYPE	PCB antenna with 0dBi gain
DATA CABLE	NA
I/O PORTS	NA
ACCESSORY DEVICES	NA

NOTE:

1. This report is prepared for Class II Permissive Change. Difference compared with original report is adding SDIO function and PCB layout changed. Therefore all test items had been re-tested and presented in the test report.
2. The EUT operates in the 2.4GHz frequency range, lets you connect IEEE 802.11g or IEEE 802.11b devices to the network. With its high-speed data transmissions of up to 54Mbps.
3. The EUT with two platforms as below:

Mobile Data Terminals (MDTs)
Vehicle Mounted Devices (VMDs)

4. The above EUT information was declared by manufacturer and for more detailed features description, please refer to the manufacturer's specifications or User's Manual.

3.2 DESCRIPTION OF TEST MODES

Eleven channels are provided to this EUT.

CHANNEL	FREQUENCY	CHANNEL	FREQUENCY
1	2412 MHz	7	2442 MHz
2	2417 MHz	8	2447 MHz
3	2422 MHz	9	2452 MHz
4	2427 MHz	10	2457 MHz
5	2432 MHz	11	2462 MHz
6	2437 MHz		

3.2.1 CONFIGURATION OF SYSTEM UNDER TEST

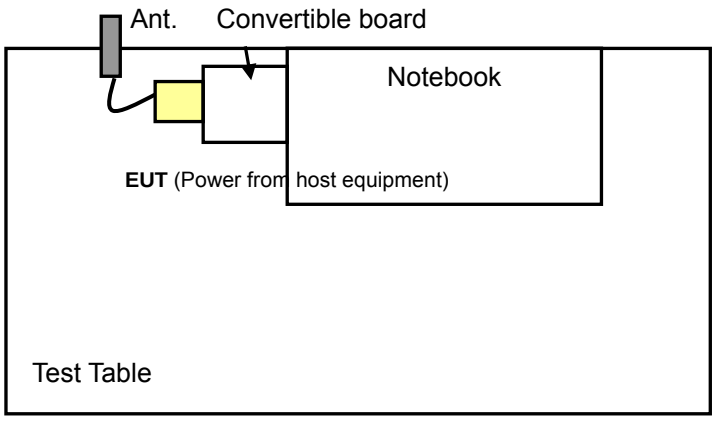

3.2.2 TEST MODE APPLICABILITY AND TESTED CHANNEL DETAIL

EUT CONFIGURE MODE	APPLICABLE TO			DESCRIPTION
	PLC	RE<1G	RE≥1G	
-	√	√	√	-

Where **PLC:** Power Line Conducted Emission **RE<1G:** Radiated Emission below 1GHz
RE≥1G: Radiated Emission above 1GHz

RADIATED EMISSION TEST (ABOVE 1 GHz):

☒ Pre-Scan has been conducted to determine the worst-case mode from all possible combinations between available modulations, xyz axis, data rates, antenna ports (if EUT with antenna diversity architecture) and packet type.

☒ Following channel(s) was (were) selected for the final test as listed below.

MODE	AVAILABLE CHANNEL	TESTED CHANNEL	MODULATION TECHNOLOGY	MODULATION TYPE	DATA RATE (Mbps)	AXIS
802.11b	1 to 11	1, 6, 11	DSSS	DBPSK	1	z

RADIATED EMISSION TEST (BELOW 1 GHz):

☒ Pre-Scan has been conducted to determine the worst-case mode from all possible combinations between available modulations, xyz axis, data rates, antenna ports (if EUT with antenna diversity architecture) and packet type.

☒ Following channel(s) was (were) selected for the final test as listed below.

MODE	AVAILABLE CHANNEL	TESTED CHANNEL	MODULATION TECHNOLOGY	MODULATION TYPE	DATA RATE (Mbps)	AXIS
802.11b	1 to 11	1	DSSS	DBPSK	1	z

POWER LINE CONDUCTED EMISSION TEST:

☒ Pre-Scan has been conducted to determine the worst-case mode from all possible combinations between available modulations, data rates and antenna ports (if EUT with antenna diversity architecture).

☒ Following channel(s) was (were) selected for the final test as listed below.

MODE	AVAILABLE CHANNEL	TESTED CHANNEL	MODULATION TECHNOLOGY	MODULATION TYPE	DATA RATE (Mbps)
802.11b	1 to 11	1	DSSS	DBPSK	1

3.3 GENERAL DESCRIPTION OF APPLIED STANDARDS

The EUT is a RF product. According to the specifications of the manufacturer, it must comply with the requirements of the following standards:

FCC Part 15, Subpart B, Class B

ANSI C63.4-2003

All test items have been performed and recorded as per the above standards.

.

3.4 DESCRIPTION OF SUPPORT UNITS

The EUT has been tested as an independent unit together with other necessary accessories or support units. The following support units or accessories were used to form a representative test configuration during the tests.

NO.	PRODUCT	BRAND	MODEL NO.	SERIAL NO.	FCC ID
1	NOTEBOOK	HP	nx6215	CND5390CMP	FCC DoC Approved
2	CONVERTIBLE BOARD	NA	NA	NA	NA

NO.	SIGNAL CABLE DESCRIPTION OF THE ABOVE SUPPORT UNITS
1	NA
2	NA

NOTE: 1. All power cords of the above support units are non shielded (1.8m).

2. Convertible board is used to control EUT transmit at specific channel.

4 TEST TYPES AND RESULTS

4.1 RADIATED EMISSION MEASUREMENT

4.1.1 LIMITS OF RADIATED EMISSION MEASUREMENT

Emissions radiated outside of the specified bands, shall be according to the general radiated limits in 15.109 as following:

Frequencies (MHz)	Field strength (microvolts/meter)	Measurement distance (meters)
30-88	100	3
88-216	150	3
216-960	200	3
Above 960	500	3

NOTE:

1. The lower limit shall apply at the transition frequencies.
2. Emission level (dBuV/m) = 20 log Emission level (uV/m).
3. As shown in 15.35(b), for frequencies above 1000MHz, the field strength limits are based on average detector, however, the peak field strength of any emission shall not exceed the maximum permitted average limits, specified above by more than 20dB under any condition of modulation.

4.1.2 TEST INSTRUMENTS

DESCRIPTION & MANUFACTURER	MODEL NO.	SERIAL NO.	CALIBRATED UNTIL
Test Receiver ROHDE & SCHWARZ	ESCI	100424	Jul. 27, 2008
Spectrum Analyzer Agilent	E4446A	MY44360128	Dec. 06, 2008
BILOG Antenna SCHWARZBECK	VULB9168	9168-160	May 31, 2008
HORN Antenna SCHWARZBECK	9120D	9120D-209	Jun. 28, 2008
HORN Antenna SCHWARZBECK	BBHA 9170	BBHA9170243	Dec. 24, 2008
Preamplifier Agilent	8447D	2944A10633	Oct. 28, 2008
Preamplifier Agilent	8449B	3008A01964	Oct. 23, 2008
RF signal cable HUBER+SUHNNER	SUCOFLEX 104	283402/4	Dec. 06, 2008
RF signal cable HUBER+SUHNNER	SUCOFLEX 104	251644/4	Dec. 06, 2008
Software ADT.	ADT_Radiated_V7.6	NA	NA
Antenna Tower inn-co GmbH	MA 4000	013303	NA
Antenna Tower Controller inn-co GmbH	CO2000	017303	NA
Turn Table ADT.	TT100.	TT93021703	NA
Turn Table Controller ADT.	SC100.	SC93021703	NA

NOTE: 1. The calibration interval of the above test instruments is 12 months and the calibrations are traceable to NML/ROC and NIST/USA.

2. The test was performed in HwaYa Chamber 3.

3. The horn antenna and HP preamplifier (model: 8449B) are used only for the measurement of emission frequency above 1GHz if tested.

4. The FCC Site Registration No. is 988962.

5. The IC Site Registration No. is IC3789B-3.

4.1.3 TEST PROCEDURES

a. The EUT was placed on the top of a rotating table 0.8 meters above the ground at a 3 meters semi-anechoic chamber. The table was rotated 360 degrees to determine the position of the highest radiation.

b. The EUT was set 3 meters away from the interference-receiving antenna, which was mounted on the top of a variable-height antenna tower.

c. The antenna is a broadband antenna, and its height is varied from one meter to four meters above the ground to determine the maximum value of the field strength. Both horizontal and vertical polarizations of the antenna are set to make the measurement.

d. For each suspected emission, the EUT was arranged to its worst case and then the antenna was tuned to heights from 1 meter to 4 meters and the rotatable table was turned from 0 degrees to 360 degrees to find the maximum reading.

e. The test-receiver system was set to Peak Detect Function and Specified Bandwidth with Maximum Hold Mode.

f. If the emission level of the EUT in peak mode was lower than the limit specified, then testing could be stopped and the peak values of the EUT would be reported. Otherwise the emissions would be re-tested one by one using peak, quasi-peak method or average method as specified and then reported in data sheet.

NOTE:

1. The resolution bandwidth and video bandwidth of test receiver/spectrum analyzer is 120kHz for Quasi-peak detection at frequency below 1GHz.
2. All modes of operation were investigated and the worst-case emissions are reported.

4.1.4 DEVIATION FROM TEST STANDARD

No deviation.

4.1.5 TEST SETUP

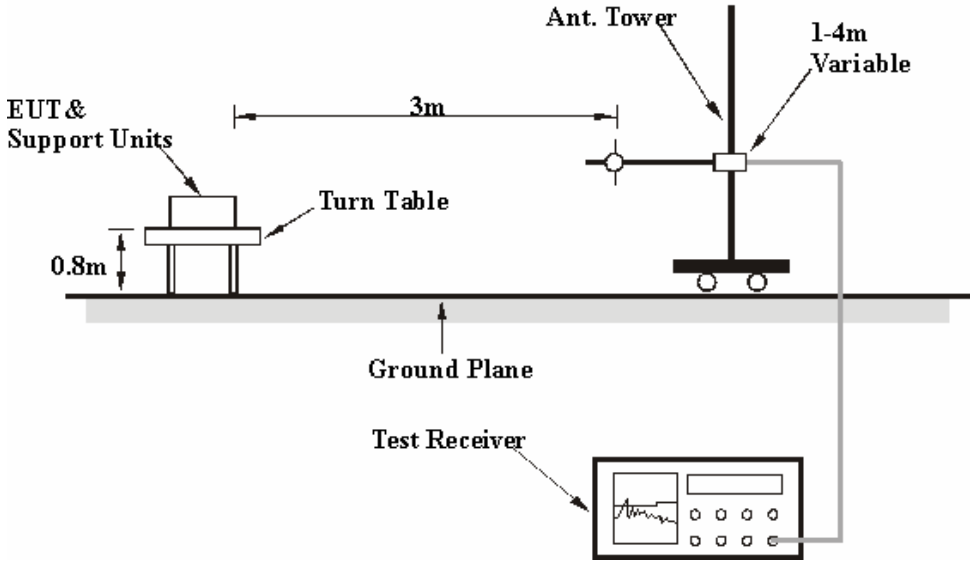

For the actual test configuration, please refer to the attached file (Test Setup Photo).

4.1.6 EUT OPERATING CONDITIONS

a. Connected the EUT to notebook system and placed on a testing table.
b. The notebook system ran a test program (provided by manufacturer) to enable EUT under receiving condition continuously at specific channel frequency.
c. The necessary accessories enable the system in full functions.

4.1.7 TEST RESULTS

802.11b DSSS MODULATION

EUT TEST CONDITION		MEASUREMENT DETAIL	
CHANNEL	Channel 1	FREQUENCY RANGE	1 ~ 25GHz
INPUT POWER (SYSTEM)	120Vac, 60 Hz	DETECTOR FUNCTION	Peak (PK) Average (AV)
ENVIRONMENTAL CONDITIONS	25deg. C, 65%RH 999hPa	TESTED BY	Brad Wu

ANTENNA POLARITY & TEST DISTANCE: HORIZONTAL AT 3 M								
NO.	FREQ. (MHz)	EMISSION LEVEL (dBuV/m)	LIMIT (dBuV/m)	MARGIN (dB)	ANTENNA HEIGHT (m)	TABLE ANGLE (Degree)	RAW VALUE (dBuV)	CORRECTION FACTOR (dB/m)
1	1608.00	42.12 PK	74.00	-31.88	1.00 H	36	11.70	30.42
2	1608.00	32.41 AV	54.00	-21.59	1.00 H	36	1.99	30.42
ANTENNA POLARITY & TEST DISTANCE: VERTICAL AT 3 M								
NO.	FREQ. (MHz)	EMISSION LEVEL (dBuV/m)	LIMIT (dBuV/m)	MARGIN (dB)	ANTENNA HEIGHT (m)	TABLE ANGLE (Degree)	RAW VALUE (dBuV)	CORRECTION FACTOR (dB/m)
1	1608.00	43.24 PK	74.00	-30.76	1.06 V	216	12.82	30.42
2	1608.00	33.38 AV	54.00	-20.62	1.06 V	216	2.96	30.42

REMARKS: 1. Emission level (dBuV/m) = Raw Value (dBuV) + Correction Factor (dB/m).
2. Correction Factor (dB/m) = Antenna Factor (dB/m) + Cable Factor (dB).
3. The other emission levels were very low against the limit.
4. Margin value = Emission level – Limit value.

EUT TEST CONDITION		MEASUREMENT DETAIL	
CHANNEL	Channel 6	FREQUENCY RANGE	1 ~ 25GHz
INPUT POWER (SYSTEM)	120Vac, 60 Hz	DETECTOR FUNCTION	Peak (PK) Average (AV)
ENVIRONMENTAL CONDITIONS	25deg. C, 65%RH 999hPa	TESTED BY	Brad Wu

ANTENNA POLARITY & TEST DISTANCE: HORIZONTAL AT 3 M								
NO.	FREQ. (MHz)	EMISSION LEVEL (dBuV/m)	LIMIT (dBuV/m)	MARGIN (dB)	ANTENNA HEIGHT (m)	TABLE ANGLE (Degree)	RAW VALUE (dBuV)	CORRECTION FACTOR (dB/m)
1	1624.00	43.25 PK	74.00	-30.75	1.03 H	29	12.82	30.43
2	1624.00	32.68 AV	54.00	-21.32	1.03 H	29	2.25	30.43
ANTENNA POLARITY & TEST DISTANCE: VERTICAL AT 3 M								
NO.	FREQ. (MHz)	EMISSION LEVEL (dBuV/m)	LIMIT (dBuV/m)	MARGIN (dB)	ANTENNA HEIGHT (m)	TABLE ANGLE (Degree)	RAW VALUE (dBuV)	CORRECTION FACTOR (dB/m)
1	1624.00	44.35 PK	74.00	-29.65	1.08 V	211	13.92	30.43
2	1624.00	34.42 AV	54.00	-19.58	1.08 V	211	3.99	30.43

REMARKS: 1. Emission level (dBuV/m) = Raw Value (dBuV) + Correction Factor (dB/m).
2. Correction Factor (dB/m) = Antenna Factor (dB/m) + Cable Factor (dB).
3. The other emission levels were very low against the limit.
4. Margin value = Emission level – Limit value.

EUT TEST CONDITION		MEASUREMENT DETAIL	
CHANNEL	Channel 11	FREQUENCY RANGE	1 ~ 25GHz
INPUT POWER (SYSTEM)	120Vac, 60 Hz	DETECTOR FUNCTION	Peak (PK) Average (AV)
ENVIRONMENTAL CONDITIONS	25deg. C, 65%RH 999hPa	TESTED BY	Brad Wu

ANTENNA POLARITY & TEST DISTANCE: HORIZONTAL AT 3 M								
NO.	FREQ. (MHz)	EMISSION LEVEL (dBuV/m)	LIMIT (dBuV/m)	MARGIN (dB)	ANTENNA HEIGHT (m)	TABLE ANGLE (Degree)	RAW VALUE (dBuV)	CORRECTION FACTOR (dB/m)
1	1641.00	43.45 PK	74.00	-30.55	1.09 H	249	13.00	30.45
2	1641.00	32.84 AV	54.00	-21.16	1.09 H	249	2.39	30.45
ANTENNA POLARITY & TEST DISTANCE: VERTICAL AT 3 M								
NO.	FREQ. (MHz)	EMISSION LEVEL (dBuV/m)	LIMIT (dBuV/m)	MARGIN (dB)	ANTENNA HEIGHT (m)	TABLE ANGLE (Degree)	RAW VALUE (dBuV)	CORRECTION FACTOR (dB/m)
1	1641.00	44.08 PK	74.00	-29.92	1.10 V	28	13.63	30.45
2	1641.00	34.13 AV	54.00	-19.87	1.10 V	28	3.68	30.45

REMARKS: 1. Emission level (dBuV/m) = Raw Value (dBuV) + Correction Factor (dB/m).
2. Correction Factor (dB/m) = Antenna Factor (dB/m) + Cable Factor (dB).
3. The other emission levels were very low against the limit.
4. Margin value = Emission level – Limit value.

BELOW 1GHz WORST-CASE DATA：802.11b DSSS MODULATION

EUT TEST CONDITION		MEASUREMENT DETAIL	
CHANNEL	Channel 1	FREQUENCY RANGE	Below 1000MHz
INPUT POWER (SYSTEM)	120Vac, 60 Hz	DETECTOR FUNCTION	Quasi-Peak
ENVIRONMENTAL CONDITIONS	22deg. C, 62%RH 999hPa	TESTED BY	Brad Wu

ANTENNA POLARITY & TEST DISTANCE: HORIZONTAL AT 3 M								
NO.	FREQ. (MHz)	EMISSION LEVEL (dBuV/m)	LIMIT (dBuV/m)	MARGIN (dB)	ANTENNA HEIGHT (m)	TABLE ANGLE (Degree)	RAW VALUE (dBuV)	CORRECTION FACTOR (dB/m)
1	162.24	39.58 QP	43.50	-3.92	1.50 H	198	25.37	14.21
2	**191.12**	**42.03 QP**	**43.50**	**-1.47**	**1.50 H**	**59**	**30.08**	**11.95**
3	199.59	40.83 QP	43.50	-2.67	1.50 H	204	29.47	11.36
4	432.39	39.25 QP	46.00	-6.75	1.00 H	298	20.90	18.35
5	490.22	44.26 QP	46.00	-1.74	1.50 H	99	24.05	20.21
6	817.22	38.46 QP	46.00	-7.54	1.50 H	159	11.78	26.68
7	902.08	39.04 QP	46.00	-6.96	1.00 H	56	11.06	27.98
ANTENNA POLARITY & TEST DISTANCE: VERTICAL AT 3 M								
NO.	FREQ. (MHz)	EMISSION LEVEL (dBuV/m)	LIMIT (dBuV/m)	MARGIN (dB)	ANTENNA HEIGHT (m)	TABLE ANGLE (Degree)	RAW VALUE (dBuV)	CORRECTION FACTOR (dB/m)
1	164.15	35.21 QP	43.50	-8.29	1.50 V	213	21.10	14.11
2	491.15	43.86 QP	46.00	-2.14	1.25 V	96	23.62	20.24
3	556.25	34.38 QP	46.00	-11.62	2.00 V	226	12.40	21.98
4	753.46	35.19 QP	46.00	-10.81	1.50 V	256	9.32	25.87
5	821.45	38.66 QP	46.00	-7.34	1.50 V	94	11.92	26.74
6	961.46	33.43 QP	54.00	-20.57	1.00 V	24	4.76	28.67

REMARKS: 1. Emission level (dBuV/m) = Raw Value (dBuV) + Correction Factor (dB/m).
2. Correction Factor (dB/m) = Antenna Factor (dB/m) + Cable Factor (dB).
3. The other emission levels were very low against the limit.
4. Margin value = Emission level – Limit value.

4.2 CONDUCTED EMISSION MEASUREMENT

4.2.1 LIMITS OF CONDUCTED EMISSION MEASUREMENT

FREQUENCY OF EMISSION (MHz)	CONDUCTED LIMIT (dBμV)	
	Quasi-peak	Average
0.15 ~ 0.5	66 to 56	56 to 46
0.5 ~ 5	56	46
5 ~ 30	60	50

NOTE:
1. The lower limit shall apply at the transition frequencies.
2. The limit decreases in line with the logarithm of the frequency in the range of 0.15 to 0.50 MHz.
3. All emanations from a class A/B digital device or system, including any network of conductors and apparatus connected thereto, shall not exceed the level of field strengths specified above.

4.2.2 TEST INSTRUMENTS

DESCRIPTION & MANUFACTURER	MODEL NO.	SERIAL NO.	CALIBRATED UNTIL
Test Receiver ROHDE & SCHWARZ	ESCS30	100289	Dec. 06, 2008
RF signal cable Woken	5D-FB	Cable-HYC01-01	Jan. 06, 2009
LISN ROHDE & SCHWARZ	ESH3-Z5	100312	Jan. 30, 2009
LISN ROHDE & SCHWARZ	NNBL 8226-2	8226-142	May 07, 2008
Software ADT	ADT_Cond_V3	NA	NA

NOTE:
1. The calibration interval of the above test instruments is 12 months and the calibrations are traceable to NML/ROC and NIST/USA.
2. The test was performed in HwaYa Shielded Room 1.
3. The VCCI Site Registration No. is C-2040.

4.2.3 TEST PROCEDURES

a. The EUT was placed 0.4 meters from the conducting wall of the shielded room with EUT being connected to the power mains through a line impedance stabilization network (LISN). Other support units were connected to the power mains through another LISN. The two LISNs provide 50 ohm/ 50uH of coupling impedance for the measuring instrument.

b. Both lines of the power mains connected to the EUT were checked for maximum conducted interference.

c. The frequency range from 150kHz to 30MHz was searched. Emission levels under (Limit - 20dB) was not recorded.

4.2.4 DEVIATION FROM TEST STANDARD

No deviation.

4.2.5 TEST SETUP

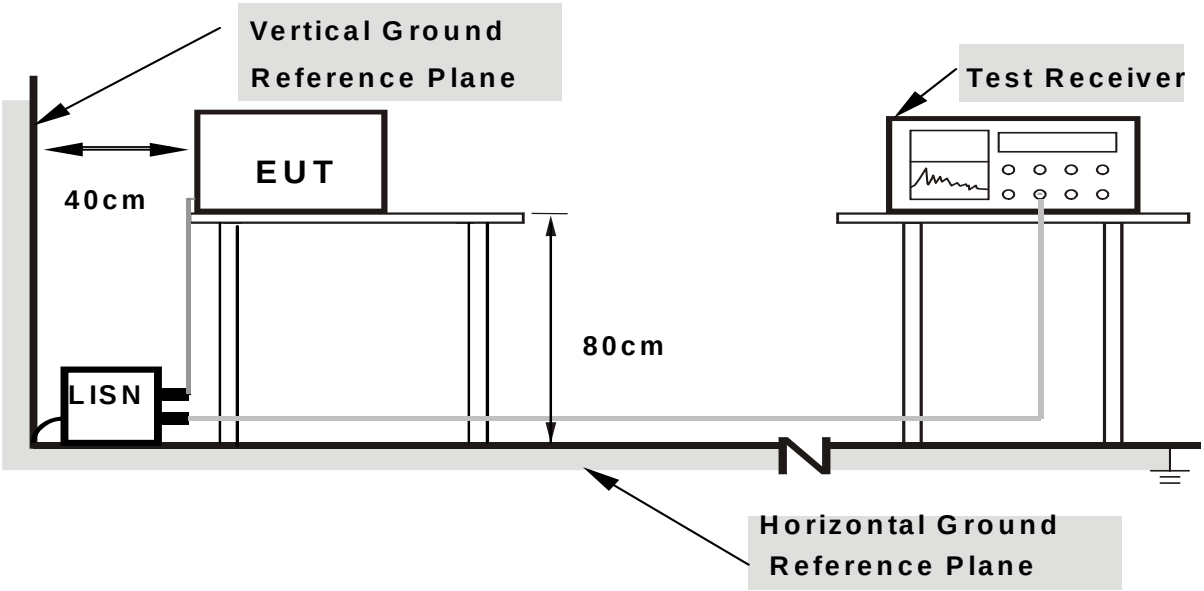

Note: 1.Support units were connected to second LISN.
2.Both of LISNs (AMN) are 80 cm from EUT and at least 80 from other units and other metal planes

For the actual test configuration, please refer to the attached file (Test Setup Photo).

4.2.6 EUT OPERATING CONDITIONS

Same as 4.1.6

4.2.7 TEST RESULTS

CONDUCTED WORST-CASE DATA

EUT TEST CONDITION		MEASUREMENT DETAIL	
CHANNEL	Channel 1	PHASE	Line 1
MODULATION TYPE	DBPSK	6dB BANDWIDTH	9 kHz
TRANSFER RATE	1Mbps	ENVIRONMENTAL CONDITIONS	23deg. C, 65%RH, 1026.0hPa
INPUT POWER (SYSTEM)	120Vac, 60 Hz	TESTED BY	Whisky Chang

	Freq.	Corr.	Reading Value		Emission Level		Limit		Margin	
No		Factor	[dB (uV)]		[dB (uV)]		[dB (uV)]		(dB)	
	[MHz]	(dB)	Q.P.	AV.	Q.P.	AV.	Q.P.	AV.	Q.P.	AV.
1	0.154	0.21	35.52	-	35.73	-	65.79	55.79	-30.06	-
2	0.209	0.21	38.96	-	39.17	-	63.26	53.26	-24.09	-
3	2.833	0.31	38.23	-	38.54	-	56.00	46.00	-17.46	-
4	3.456	0.35	38.63	-	38.98	-	56.00	46.00	-17.02	-
5	14.469	0.73	37.71	-	38.44	-	60.00	50.00	-21.56	-
6	15.871	0.80	33.53	-	34.33	-	60.00	50.00	-25.67	-

REMARKS: 1. Q.P. and AV. are abbreviations of quasi-peak and average individually.
2. "-": The Quasi-peak reading value also meets average limit and measurement with the average detector is unnecessary.
3. The emission levels of other frequencies were very low against the limit.
4. Margin value = Emission level - Limit value
5. Correction factor = Insertion loss + Cable loss
6. Emission Level = Correction Factor + Reading Value.

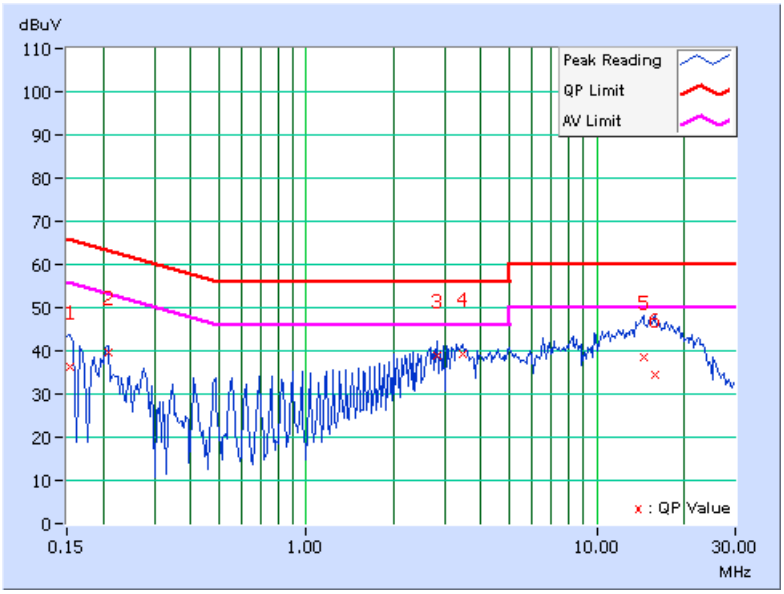

EUT TEST CONDITION		MEASUREMENT DETAIL	
CHANNEL	Channel 1	PHASE	Line 2
MODULATION TYPE	DBPSK	6dB BANDWIDTH	9 kHz
TRANSFER RATE	1Mbps	ENVIRONMENTAL CONDITIONS	23deg. C, 65%RH, 1026.0hPa
INPUT POWER (SYSTEM)	120Vac, 60 Hz	TESTED BY	Whisky Chang

	Freq.	Corr.	Reading Value		Emission Level		Limit		Margin	
No		Factor	[dB (uV)]		[dB (uV)]		[dB (uV)]		(dB)	
	[MHz]	(dB)	Q.P.	AV.	Q.P.	AV.	Q.P.	AV.	Q.P.	AV.
1	0.207	0.21	42.31	-	42.52	-	63.32	53.32	-20.80	-
2	0.275	0.21	39.00	-	39.21	-	60.97	50.97	-21.76	-
3	2.477	0.29	37.10	-	37.39	-	56.00	46.00	-18.61	-
4	**3.436**	**0.35**	**40.37**	**-**	**40.72**	**-**	**56.00**	**46.00**	**-15.28**	**-**
5	15.164	0.45	32.77	-	33.22	-	60.00	50.00	-26.78	-
6	17.414	0.49	37.39	-	37.88	-	60.00	50.00	-22.12	-

REMARKS: 1. Q.P. and AV. are abbreviations of quasi-peak and average individually.
2. "-": The Quasi-peak reading value also meets average limit and measurement with the average detector is unnecessary.
3. The emission levels of other frequencies were very low against the limit.
4. Margin value = Emission level - Limit value
5. Correction factor = Insertion loss + Cable loss
6. Emission Level = Correction Factor + Reading Value.

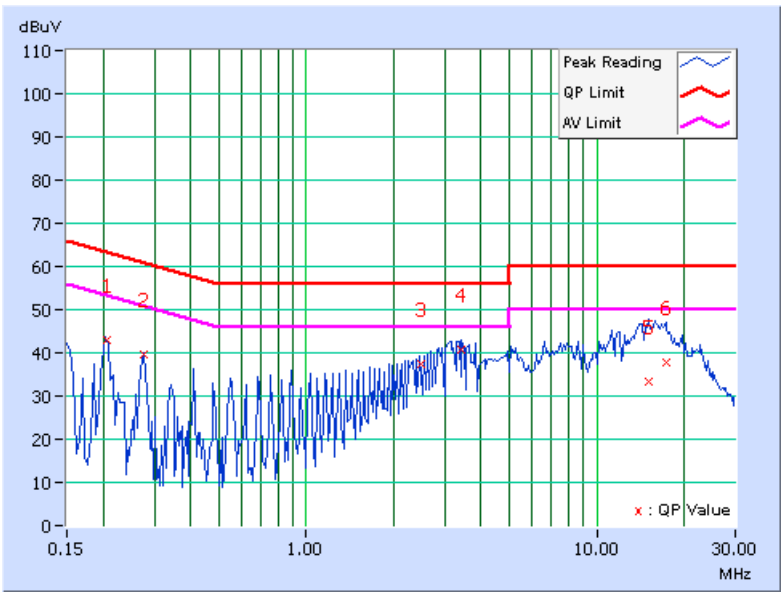

5 PHOTOGRAPHS OF THE TEST CONFIGURATION

Please refer to the attached file (Test Setup Photo).

6 INFORMATION ON THE TESTING LABORATORIES

We, ADT Corp., were founded in 1988 to provide our best service in EMC, Radio, Telecom and Safety consultation. Our laboratories are accredited and approved by the following approval agencies according to ISO/IEC 17025.

USA	FCC, UL, A2LA
Germany	TUV Rheinland
Japan	VCCI
Norway	NEMKO
Canada	INDUSTRY CANADA , CSA
R.O.C.	TAF, BSMI, NCC
Netherlands	Telefication
Singapore	GOST-ASIA(MOU)
Russia	CERTIS(MOU)

Copies of accreditation certificates of our laboratories obtained from approval agencies can be downloaded from our web site: www.adt.com.tw/index.5/phtml. If you have any comments, please feel free to contact us at the following:

Linko EMC/RF Lab
Tel: 886-2-26052180
Fax: 886-2-26051924

Hsin Chu EMC/RF Lab
Tel: 886-3-5935343
Fax: 886-3-5935342

Hwa Ya EMC/RF/Safety/Telecom Lab
Tel: 886-3-3183232
Fax: 886-3-3185050

Web Site: www.adt.com.tw

The address and road map of all our labs can be found in our web site also.

7 APPENDIX A – MODIFICATIONS RECORDERS FOR ENGINEERING CHANGES TO THE EUT BY THE LAB

No any modifications are made to the EUT by the lab during the test.